Garden Arbor • Step Stool • Low-speed Grinder • Hollow Grinding • Flip-top Tool Stand

Woodsmith®

Vol. 19 / No. 111

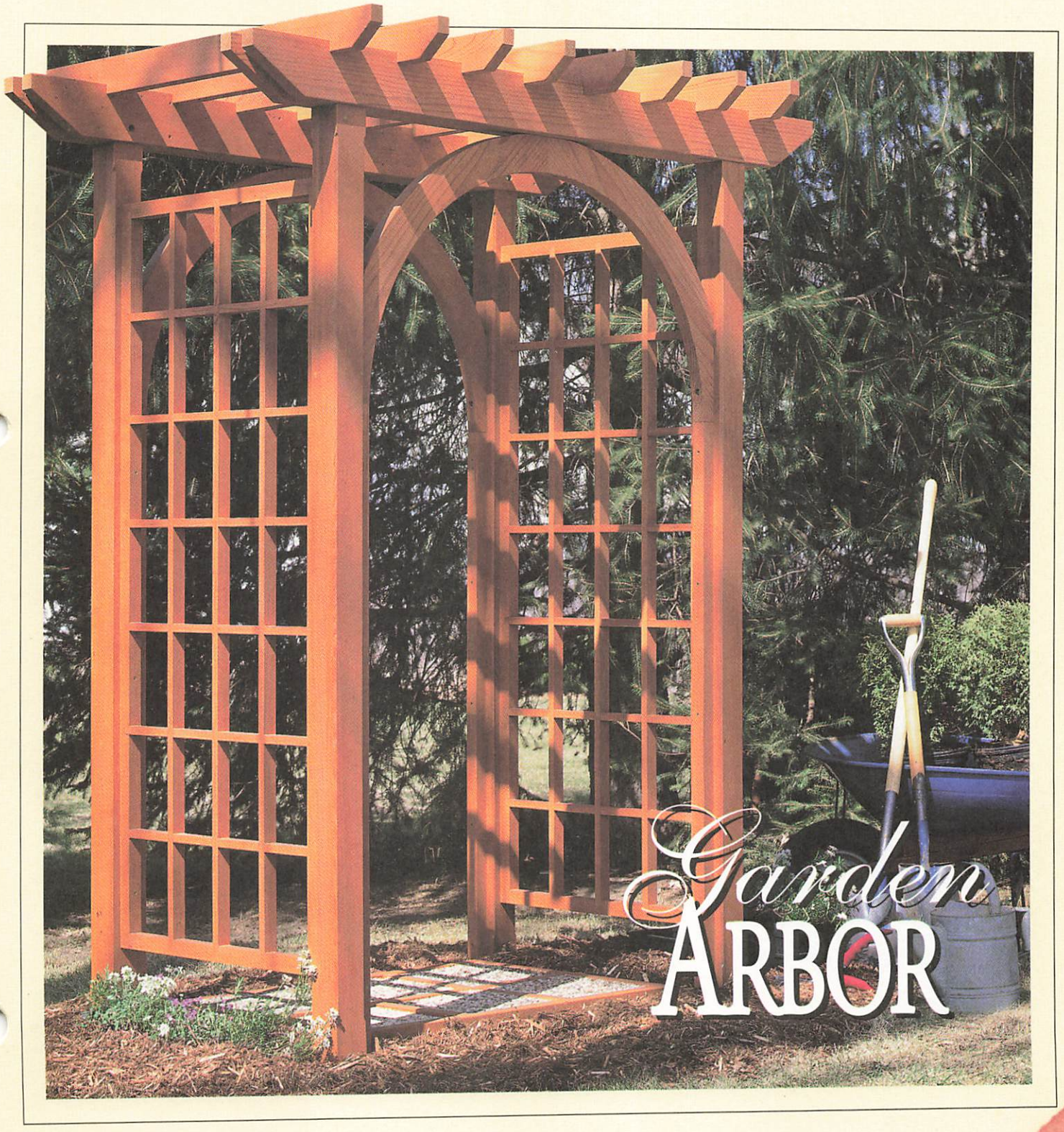

Woodsmith

No. 111 June, 1997

Publisher Donald B. Peschke
Editor Terry J. Strohman
Associate Editors Jon Garbison, Vincent Ancona
Art Director Todd Lambirth
Senior Illustrators David Kreyling, Dirk Ver Steeg
Graphic Designer Mike Mittermeier

CREATIVE RESOURCES

Creative Director: Ted Kralicek • *Project Developer:* Ken Munkel • *Sr. Project Designer:* Kent Welsh • *Project Designers:* Ted Wong Jr., Kevin C. Boyle • *Shop Manager:* Steve Curtis • *Shop Craftsman:* Steve Johnson • *Photography Dir.:* Lark Smothermon • *Senior Photographer:* Crayola England

BOOKS

Executive Editor: Douglas L. Hicks • *Art Director:* Linda Vermie • *Senior Graphic Designer:* Chris Glowacki

CIRCULATION

Subscriber Services Director: Sandy Baum • *New Business Director:* Glenda K. Battles • *Renewal Manager:* Paige Rogers • *Assistant Direct Mail Mgr.:* Julie Greenlee • *Assistant Subscription Mgr.:* Joy Krause • *Associate Graphic Design Director:* Susie Rider • *Sr. Graphic Designer:* Cheryl L. Simpson

CORPORATE SERVICES

Vice President of Planning and Finance: Jon Macarthy • *Controller:* Robin Hutchinson • *Sr. Account.:* Laura Thomas • *Accts. Payable:* Mary J. Schultz • *Production Dir.:* George Chmielarz • *Production Assistant:* Susan Dickman • *Electronic Pub:* Douglas M. Lidster • *Production Artist:* Jon Snyder • *Prepress Image Spec.:* Troy A. Clark • *New Media Manager:* Gordon C. Gaippe • *Web Site Art Director:* Gene Pederson • *Network Administator:* Al Barnes • *I.S. Support Assistant:* Chris Harrison • *Prof. Development Dir.:* Joyce Moore • *H.R. Assistant:* Kirsten Koele • *Admin. Assistant:* Julia Fish • *Receptionists:* Jeanne Johnson, Sheryl Ribbey • *Building Maint.:* Ken Griffith

WOODSMITH MAIL ORDER

Operations Director: Bob Baker • *Materials Mgr:* Mark Mattiussi • *Customer Service Mgr.:* Jennie Enos • *Nat. Sales Mgr:* Kent A. Buckton • *Warehouse Supr.:* Nancy Johnson • *Buyer:* Linda Jones • *Technical Service Rep.:* Matt TeRonde • *Oper. Assist.:* Tammy Aldini • *Team Leader:* Karla Eslinger • *Cust. Serv. Reps.:* Anna Cox, Margo Petrus, Tammy Truckenbrod, Nancy Downey, Adam Best, Deborah Rich • *Warehouse:* Chuck Carlson, Sylvia Carey, Larry Prine

WOODSMITH STORE

Manager: Dave Larson • *Assistant Manager:* Paul Schneider • *Sales Staff:* Pat Lowry, Jerome Herr, Wendell Stone, Jim Barnett, Kathy Smith, John Johnson • *Office Manager:* Vicki Edwards

Woodsmith® (ISSN 0164-4114) is published bimonthly (Feb., Apr., June, Aug., Oct., Dec.) by August Home Publishing Company, 2200 Grand, Des Moines, IA 50312.

Woodsmith® is a registered trademark of August Home Publishing.
Copyright© 1997 August Home Publishing Company. All rights reserved.

Subscriptions: Single copy: $4.99. One year subscription (6 issues), $24.95. (Canada/Foreign add $5 per year, U.S. funds.)
Periodicals Postage Paid at Des Moines, IA and at additional offices.
Postmaster: Send change of address to *Woodsmith*, Box 37112, Boone, IA 50037-2112.
Subscription Questions? Write to *Woodsmith*, P.O. Box 842, Des Moines IA 50304-9961 or call 1-800-333-5075, 8:00 am to 5:00 pm, Central Time, weekdays.
E-Mail: woodsmith@woodsmith.com
World Wide Web: http://www.woodsmith.com

Printed in U.S.A.

EDITOR'S COLUMN

SAWDUST

Winters here in the Midwest can be a bit lengthy. Which, for the most part, is okay with me. After all, when it's cold and nasty outside, there's no place I'd rather be than down in the shop building a project.

However, the old adage is true — you *can* get too much of a good thing. So when the snow finally melts and spring arrives, I'm ready for a change — a change in the weather and a change of pace.

Now don't get me wrong, I still want to build projects. I'm just looking for something a little different to work on.

GARDEN ARBOR. The garden arbor featured on page 6 provided just the opportunity I was looking for. It gave me the chance to spend a little time outside. And it offered an interesting challenge as well — a chance to try my hand at building a *large* project. (The garden arbor stands about eight feet tall, almost six feet wide, and four feet deep.)

While this is the largest project ever featured in *Woodsmith*, don't let its size fool you. It's designed to be built in small sections, none of which are complicated to build. In fact, there is very little joinery involved, and it's all quite basic — mortise and tenon and half laps.

LOW-SPEED GRINDER. The arbor isn't the only project in this issue that falls into the "something different" category. The other is the low-speed grinder featured on page 20.

This project started off the same way many of our shop projects do — with a wish list of features.

First, to prevent overheating the tool, the grinder had to run at a low speed. Second, we wanted to eliminate the expense of buying a special motor. Third, the grinder couldn't take up much space in the shop. And finally, it had to include a tool rest system that allows you to quickly and easily get a perfect hollow grind.

The solution was to use the table saw. We connected a pulley and belt to the saw arbor to produce a low-speed grinder without buying a separate motor. And since the grinder sits on top of the table saw, it doesn't require a stand that takes up extra floor space. Finally, the base of the grinder made a perfect platform for adding a tool rest with a micro-adjustment feature.

Now I have to admit that what we came up with is a bit unusual-looking. (I still remember the look on everyone's face when they saw the first prototype.) But you can't argue with the results — this tool produces an almost perfect hollow ground edge.

Hollow grinding the bevel gets the tool sharp. But to get it *razor-sharp*, you'll need to hone the bevel. Fortunately, this is easy to do and doesn't take much time. For more information on creating a razor-sharp edge, be sure to check out the sharpening article on page 28.

Terry

A LOOK INSIDE

CONTENTS

Features

Garden Arbor 6

Woodworking on a grand scale. This graceful, outdoor project stands nearly eight feet tall and incorporates several woodworking techniques. The beams are connected to the posts with mortise and tenon joinery. And the lattice side panels use basic half-lap joints.

Step Stool 14

This sturdy weekend project is constructed with through mortise and tenon joinery. Plus a handy pull-out step features a unique hidden stop system that prevents it from being pulled out too far.

Low-speed Grinder 20

Our unique shop-built grinder allows you convert your table saw into a sharpening station. And it's designed with an adjustable tool holder that makes grinding chisels and plan irons a snap.

Hollow Grinding 28

From flattening the back of the tool to the final honing of the beveled edge, this article will take you through all the steps to creating a perfect, razor-sharp hollow ground edge.

Flip-top Tool Stand 32

This easy-to-build project is a great space saver. The top on this stand spins allowing you to mount two tools on top of each other. And when you're done, it rolls out of the way.

Departments

Tips & Techniques 4
Shop Notes 18
Talking Shop 34
Sources 35

Garden Arbor page 6

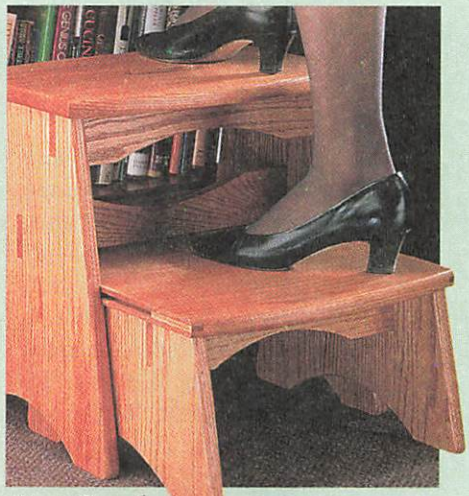

Step Stool page 14

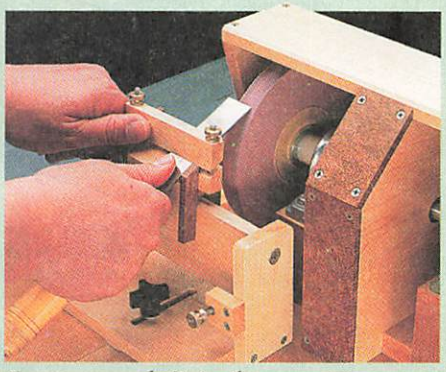

Low-speed Grinder page 20

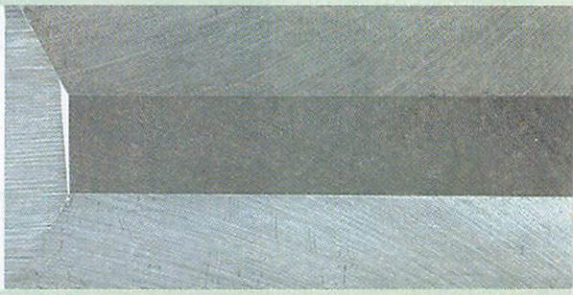

Hollow Grinding page 28

TIPS & TECHNIQUES

Extension Dog

I recently drilled a series of dog holes in the top of my workbench and mounted a woodworking vise to the front in order to clamp workpieces down on the top of my bench.

The only problem I have is trying to clamp up workpieces that are shorter than the distance between the first dog hole and the edge of my workbench.

Instead of drilling more holes in my bench, I came up with a different solution. I made an "extension" bench dog out of a piece of scrap and some dowels.

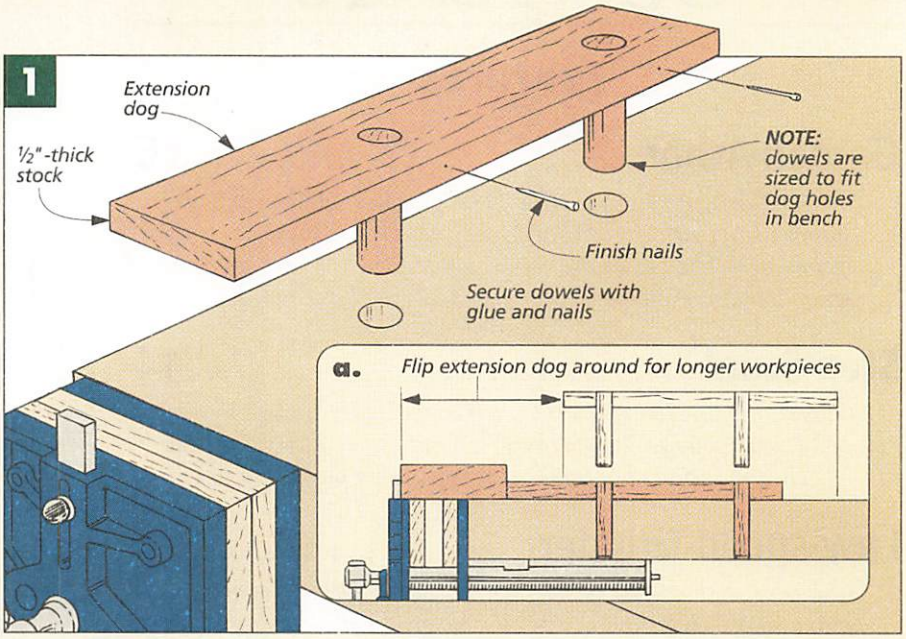

A pair of holes are drilled in the dog to match the spacing of the dog holes in my bench. Then a couple of dowels are glued into the holes and secured with nails, see Fig. 1. (The second dowel allows the bench dog to span two dog holes, making it more stable.)

Since this dog reaches nearly to the edge of the bench, it can hold very short pieces, see Fig. 1a. And by turning the dog around, I can hold slightly longer workpieces.

Philip Jacobs
St. Paul, Minnesota

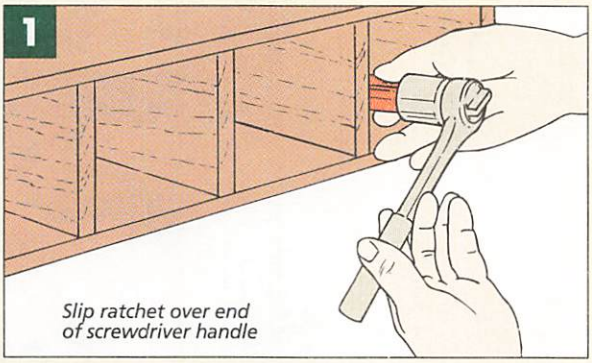

Screwdriver Extension

Recently, I was installing a small cabinet and found there wasn't enough room to get my hand in the cabinet opening to install the mounting screws.

Since I didn't have a long-handled screwdriver, I looked through my toolbox to improvise a substitute.

I grabbed my socket set and found a socket size that fit snug over the end of my screwdriver handle (a twelve-point socket works best). Then I simply used my ratchet to tighten the screws, see Fig. 1.

Jim Hovick
Edmonds, Washington

Cutting Leather

I built the box featured in Issue #107 of *Woodsmith*. But when it came time to cut the leather to fit in the bottom of the box, I used a different technique.

Before cutting the leather to size, I glued it to a piece of posterboard with spray adhesive. (It helps to first scuff the surface of the posterboard with sandpaper to give the adhesive something to grab.)

With the leather fixed to the posterboard, I was able to cut it to exact size without worrying about it stretching. Then I just glued the leather and the posterboard down to the bottom of the box.

Peter Sellon
Hudson, Massachusetts

Stop Block

Normally when I have to cut several pieces the same length, I use a stop block on my miter gauge, or I clamp a block of wood to the rip fence of my table saw to use as a stop.

But recently I was making a project that called for several short pieces. Because of their small size, I had to come up with a better (and safer) method for cutting these pieces.

So what I did was to make an altogether different kind of stop block. My stop block is adjustable and has a runner that fits in the miter gauge slot of my saw, see photo at right.

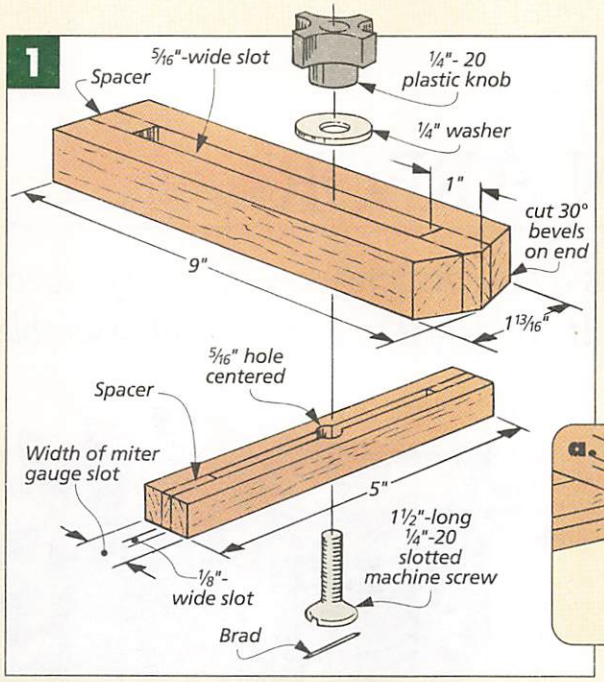

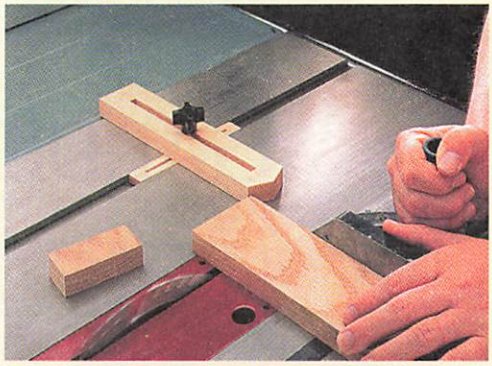

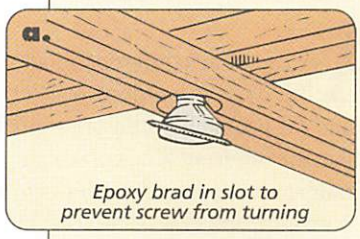

The block is made up of two pieces of 3/4"-thick stock. A couple 5/16"-thick spacers are glued between the two pieces to create a slot for a bolt, see Fig. 1.

Then I cut 30° bevels on one end of the block. This creates a blunt "point" to butt your workpiece up to when using the stop block.

The runner construction is similar to that of the block, except that it's sized to fit in the miter gauge slot of your table saw. And the spacers are only 1/8" thick.

Then a 5/16"-dia. countersunk hole is drilled in the center of the runner for a machine screw.

A machine screw, a washer, and a plastic knob are all that's needed to secure the stop block. By tightening the knob, the machine screw spreads the runner apart slightly, locking it in the miter gauge slot.

To prevent the screw from spinning in the hole when tightening the knob, I epoxied a wire brad into the screw head. The brad fits in the slot of the runner and locks the screw in place, see Fig. 1a.

Allen W. Smith
Holden, Massachusetts

Making Cut-out Hearts

I like to add small, heart-shaped cutouts to some of the projects I build. The trouble I've had in the past is getting all the hearts the same size and shape.

Recently however, I came up with a quick and easy method for making heart cutouts.

I start by laying out a line where I want the heart to be centered. Then using a Forstner bit I drill two overlapping holes — each one an equal distance from the centerline, see Fig. 1.

To finish the heart, I just cut out the V-shaped piece at the bottom, see Fig. 2.

John LeMire
Italy

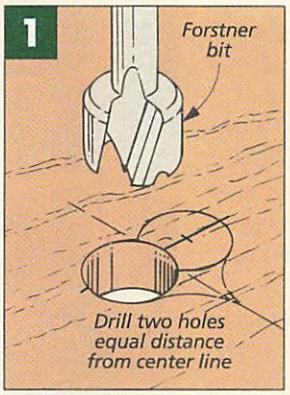

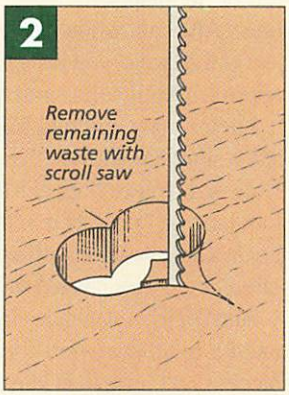

QUICK TIPS

BLAST GATE TIP

The blast gates on my dust collector have a tendency to rattle closed.

So to hold the gates open, I just clamp on an ordinary clothespin. (I glued sandpaper to the jaws of the pin to give it a better grip.)

David Zeidler
Shakopee, Minnesota

DRILL BIT TIP

I have a hard time reading the stamped sizes on drill bits. So I dip the end of the bit in paint, then wipe off the excess. The paint fills in the recesses of the numbers, making them easier to read.

Thomas Piazza
Virginia Beach, Virginia

SUBMIT YOUR TIPS

If you would like to share an *original* shop-tested tip, send it to: *Woodsmith*, Tips and Techniques, 2200 Grand Avenue, Des Moines, Iowa 50312. Or if it's easier, FAX it to us at: 515–282–6741. Or use our E-Mail: woodsmith@woodsmith.com

If published, you'll receive $30 to $150, depending on the published length. Include a brief explanation and sketch or photo. And don't worry, we'll rewrite the tip and redraw the art, if necessary. Also, *please* include a daytime phone number.

GARDEN ARBOR

This arbor presents a few challenges — the biggest being its size. But don't let that scare you. It's designed to be built and assembled in small sections.

Ask me what's different about building an outdoor project, and I'd probably rattle off a quick list: the different kinds of woods you might use, the need for exterior grade hardware and glue, as well as the different finishing options. But none of these differences really affect the woodworking part of the project. How the pieces are cut and put together.

But this outdoor project is different for another reason — its size. Standing almost 8-feet tall, this garden arbor is easily the biggest woodworking project I've ever tackled.

And even though there was plenty of woodworking involved in building the arbor, it also allowed me to get out of my usual woodworking "routine." After all, when building a project of this scale, you just can't always approach things the same way.

For instance, cutting a tenon is usually a simple matter on the table saw. Unless the piece happens to be an 8-foot-long 4x4 post. But in this case, I got in a little practice with a tool I don't often get to use: a hand saw.

And if it's been awhile since you've used a hand saw, don't worry. The pieces don't have to fit like a glove. In fact, having a little "play" in the fit is what you're after. It'll allow the arbor to go together easier later on.

OUTDOOR MATERIALS. Of course, building a project that ends up outdoors does require some different materials. As for the wood, I built my arbor out of redwood. But there are a number of other woods that could be used with great results, including cedar, white oak, and Douglas fir.

And an outdoor project also has to put up with extremes in weather. This means using screws that aren't going to rust and glue that's going to hold. So I chose exterior grade hardware. And when gluing pieces together, I used a strong, "weatherproof" adhesive: polyurethane glue. (For more on this glue, see page 34.)

OUTDOOR INSTALLATION. Finally, this arbor also lets you get outside a bit, too. But you won't need a large crew to put it together. It's designed to be built and assembled in smaller sections, so you can break it down and reassemble it easily.

And when the arbor is ready to be installed, you also get to be construction worker for a day. (I was the foreman, of course.) Our arbor is set on concrete pads and secured with expandable anchors and L-brackets, see the right detail on page 7. (And turn to page 13 for a complete description of our installation procedure.)

Construction Details

OVERALL DIMENSIONS:
91¾"H x 75"W x 47"D

Outer Beam

Cross Bar

#8 x 4" Fh woodscrew

¼" x 3½" lag screw

Outer beams act as cheeks for built up mortise

Spline aligns arch halves during assembly

Arch Half

¼" x 4" lag screw

¼" x 3½" lag screw

NOTE: All screws used on this arbor are exterior grade

#8 x 3" Fh woodscrew

Arch Support

Post

NOTE: Posts can be made from solid 4x4 material or by gluing up three pieces

#8 x 1½" Fh woodscrew

Lattice screen joined with half laps

NOTE: Cross beams are laminated and screwed from the inside face with #8 x 2½" Fh woodscrews

¼" x 3½" lag screw pins beam to post

¼" x 2" lag screw

Post

L-bracket

Concrete anchor

Form

Concrete

Side Assemblies

To build the arbor, I started with the side assemblies, see drawing at right. This includes both the posts, as well as the lattice screens that connect the posts at the sides of the arbor.

POSTS. I began with the **posts (A)**, see drawing. These are designed to be cut from 8'-long 4x4s (3½" x 3½"). But it's more important that the posts are straight. So if you have a hard time finding straight 4x4s at the lumber yard, you can glue up the posts in three pieces, see page 19.

Note: If you glue up the posts, be sure to use a "weatherproof" glue. For this project, I used polyurethane glue. For more on this, see page 34.

The first thing to do is to cut the posts to final length (86¾"), see drawing. My first instinct was to use the table saw. But then I realized that these pieces were too long. So I cut them to length with a hand saw.

With the posts cut to length, the next step is to cut the tenon on the top end of each, see drawing and detail 'a' at right. These tenons will fit into the beam assemblies later. And since the mortises in the beams will equal the thickness of "two-by" material, I cut these tenons 1½" thick.

Again, the posts are too long to be able to cut their tenons on the table saw. So again, I used a hand saw. For more on cutting tenons with a hand saw or circular saw, see page 19.

All that's left to complete the posts is to rout a stopped chamfer on each edge, see drawing.

LATTICE SCREENS. The next step is to make the lattice screens that join the posts, see drawing above. These screens are built in two steps. First, I made the dividers inside. Then I added the frame that surrounds them, see Figs. 1 and 2.

SCREEN DIVIDERS. To make the screens, I started with the **vertical (B)** and **horizontal dividers (C)**, see Fig. 1. And to join these dividers, I used simple half laps.

You might think that cutting all those half laps (and getting them to line up) would be a hassle. But not really. The secret is to lay out and cut a series of notches in 2x8 blanks and

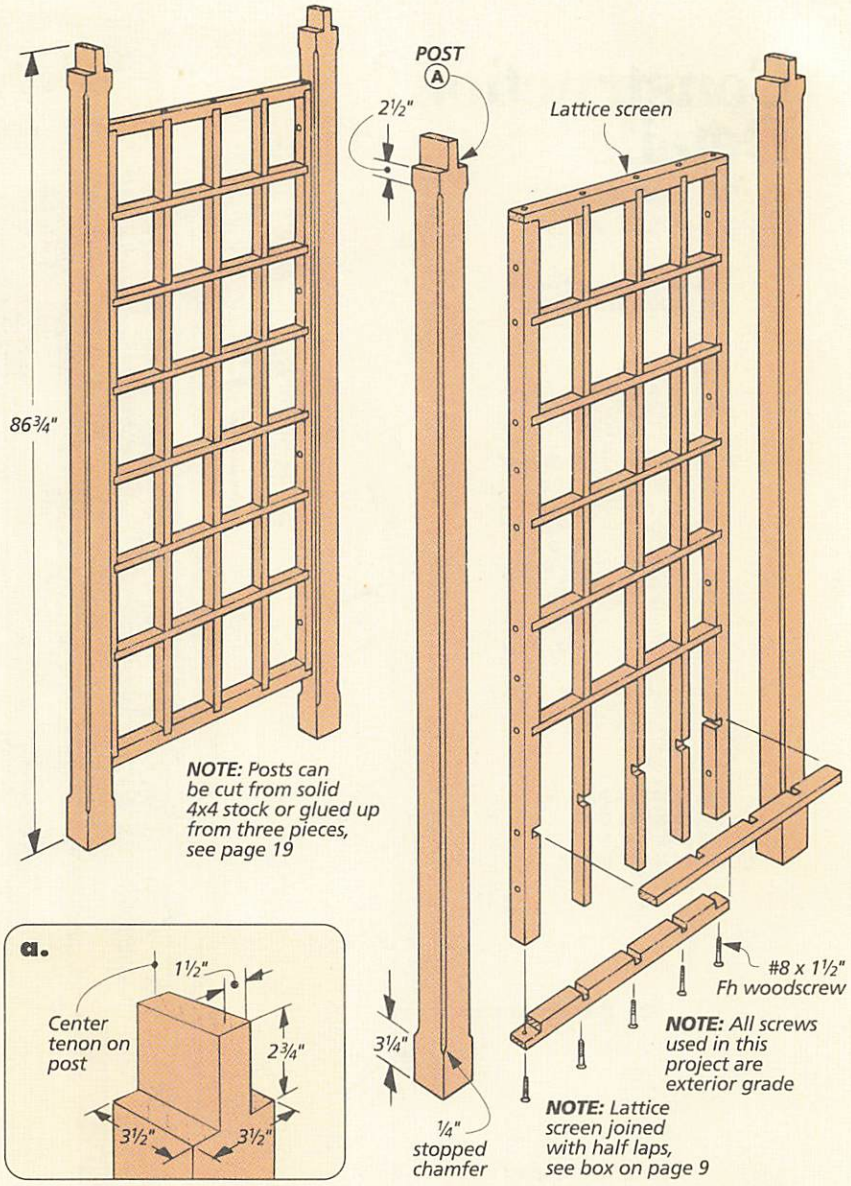

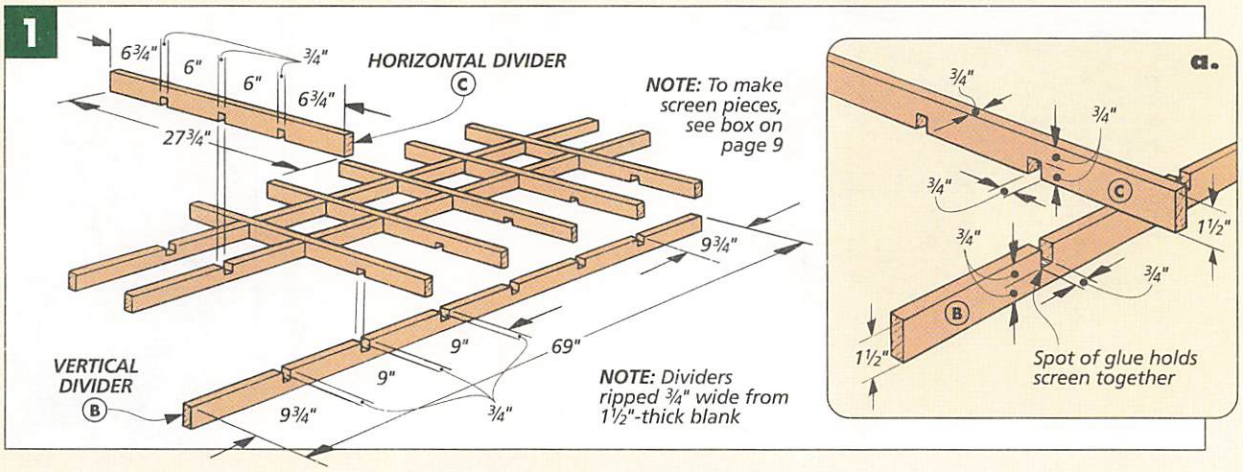

then rip the strips from the blanks, see the box below. This way, all the half laps line up perfectly.

After the notches were cut on the blanks for these pieces, I ripped them 3/4" wide (thick). Then I assembled the dividers, putting a tiny spot of glue on each half lap to hold the pieces together. (I used the polyurethane glue here, too.)

SCREEN SIDES & ENDS. With the dividers assembled, the **sides (D)** and **ends (E)** of the screen can be added as a frame around the dividers, see Fig. 2. These frame pieces are notched just like the dividers, but these aren't true half laps — the notches simply fit over the dividers.

I built the sides first, starting with an oversize blank. But this time, I laid out the pieces by setting them against the divider assembly and marking them from the horizontal pieces. Then after the notches are cut, rip them to width so they match the thickness of the divider pieces (1 1/2").

The screen ends are a little different from the other screen pieces. In addition to the 3/4"-wide notches that hold the vertical dividers, the ends also have 1 1/2"-wide rabbets to hold the screen sides, see Figs. 2a and 2c.

Now before screwing the frames to the dividers, drill a series of countersunk shank holes in the sides (D), see Figs. 2b and c. These allow you to attach the completed lattice screens to the posts, see Fig. 3. (There's not enough room to do this after you've assembled the screens.)

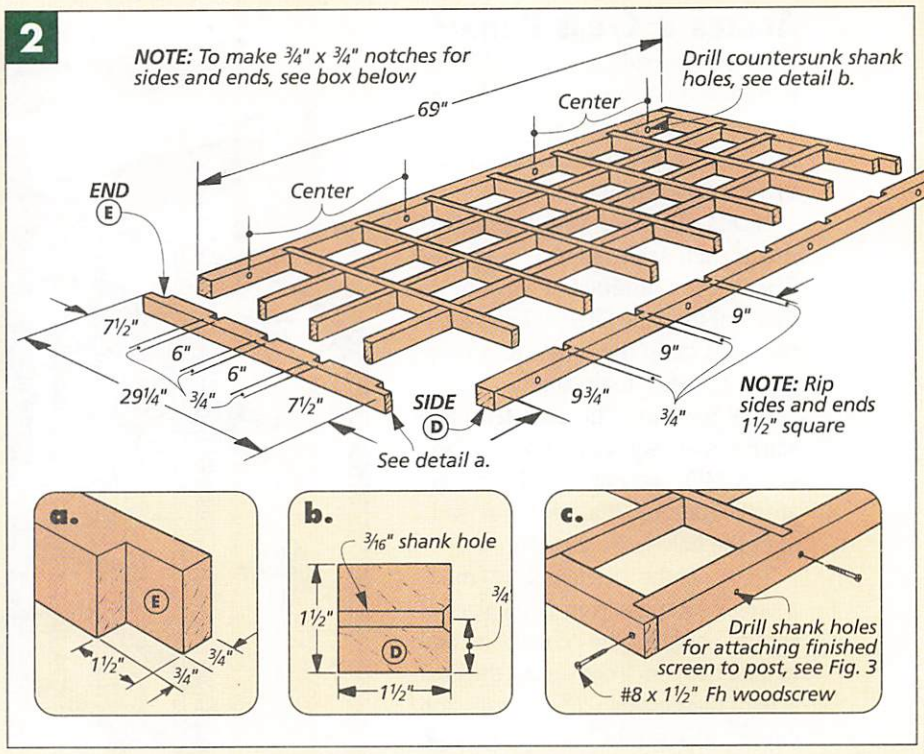

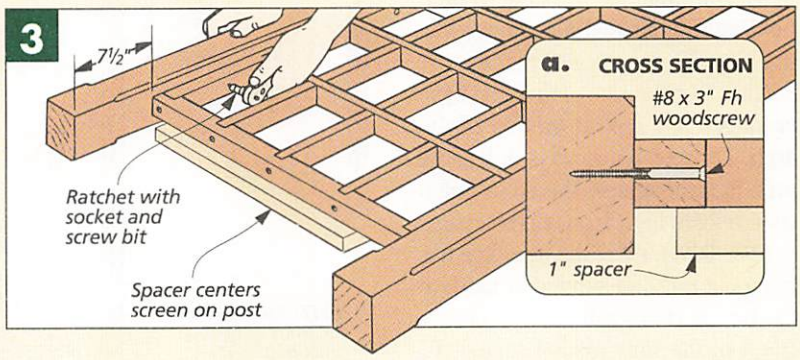

▲ *When there's no room for a screwdriver, I use a ratchet and a 1/4" socket with a Phillips head driver bit.*

ASSEMBLY. Now the sides and ends can be screwed to the dividers, see Fig. 2c. Then the completed screens can be screwed to the posts, see Fig. 3. To do this, I set the screens on spacers to center them on the posts. The only problem is there's not enough room for a screwdriver. So I used a ratchet and a 1/4" socket with a Phillips head driver bit, see margin photo.

CUTTING SCREEN PIECES

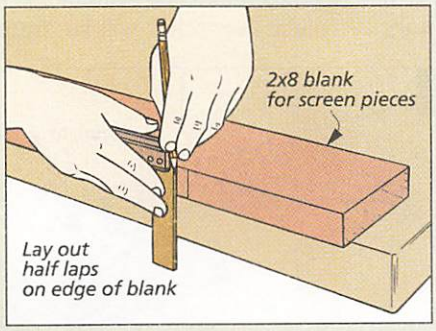

Step 1. *First, cut a blank to final length and then lay out the position of the notches on the edge of the blank.*

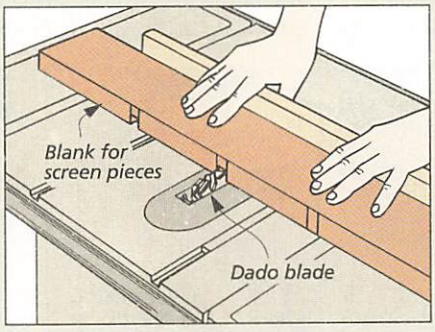

Step 2. *Cut a series of 3/4"-wide dadoes across the blank, using the miter gauge and an auxiliary fence to support the piece.*

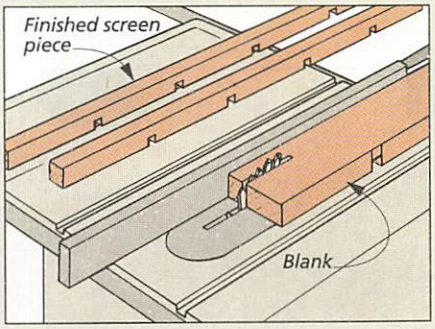

Step 3. *The last step is to rip the individual screen pieces to final width (thickness) from the blank.*

Arches & Cross Beams

Now that the side assemblies of the garden arbor are complete, it's time to connect these assemblies at the front and back with arches and cross beams, see drawing.

ARCHES. To keep things simple, I made each arch out of two pieces. There are a number of ways to do this, but to make all the pieces identical and keep the waste to a minimum, I made a template.

ARCH TEMPLATE. The arch template starts out as a square hardboard blank (26" x 24"), see Fig. 4. This will create a 26"-tall arch that will be 48" wide after the halves are glued up.

To lay out the arch template, I made a simple compass from a thin piece of scrap. A hole for the centerpoint and two for the pencil determine the final size of the curves (26⅛" for the top curve, 22½" for the bottom), see Fig. 4. I used a nail for the centerpoint, holding it against the corner while drawing the curves, see Fig. 4a.

Note that the size of the top curve creates a flat spot at the top of the arch. This is intentional — it lets the arch fit tight against the cross beam later, refer to Fig. 9b on opposite page.

ARCH HALVES. After the template has been cut out and sanded smooth, it can be used to lay out the arch pieces. Each of the four **arch halves (F)** starts out as a 36"-long 2x12 blank, see Fig. 5. Then after using the template to lay out the pieces, they can be cut out and sanded smooth.

Next, to keep the halves of each arch aligned, I added a spline. To do this, I cut a centered groove in the top end of each arch half, cutting it in two passes, see Fig. 6.

Shop Note: To prevent the workpiece from tipping as the groove is cut, I attached an auxiliary fence to the rip fence and clamped a scrap piece to the arch to act as a runner, see photo in margin at left.

After cutting the grooves on the arch halves, I cut splines to fit. But to prevent the spline from splitting, make sure the grain runs across the joint line, see Fig. 7a.

ARCH ASSEMBLY. Now the arches are ready to be glued together, see Fig. 7. To hold the joint together, I clamped a pair of cleats to each piece and then clamped the cleats together.

Since the arches will be "framed

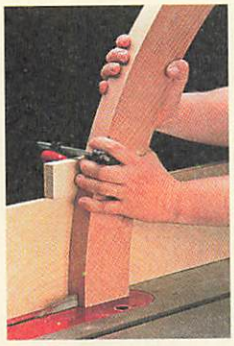

▲ *When cutting the groove on the ends of the arch halves, I used an auxiliary fence and a scrap runner to support the workpiece.*

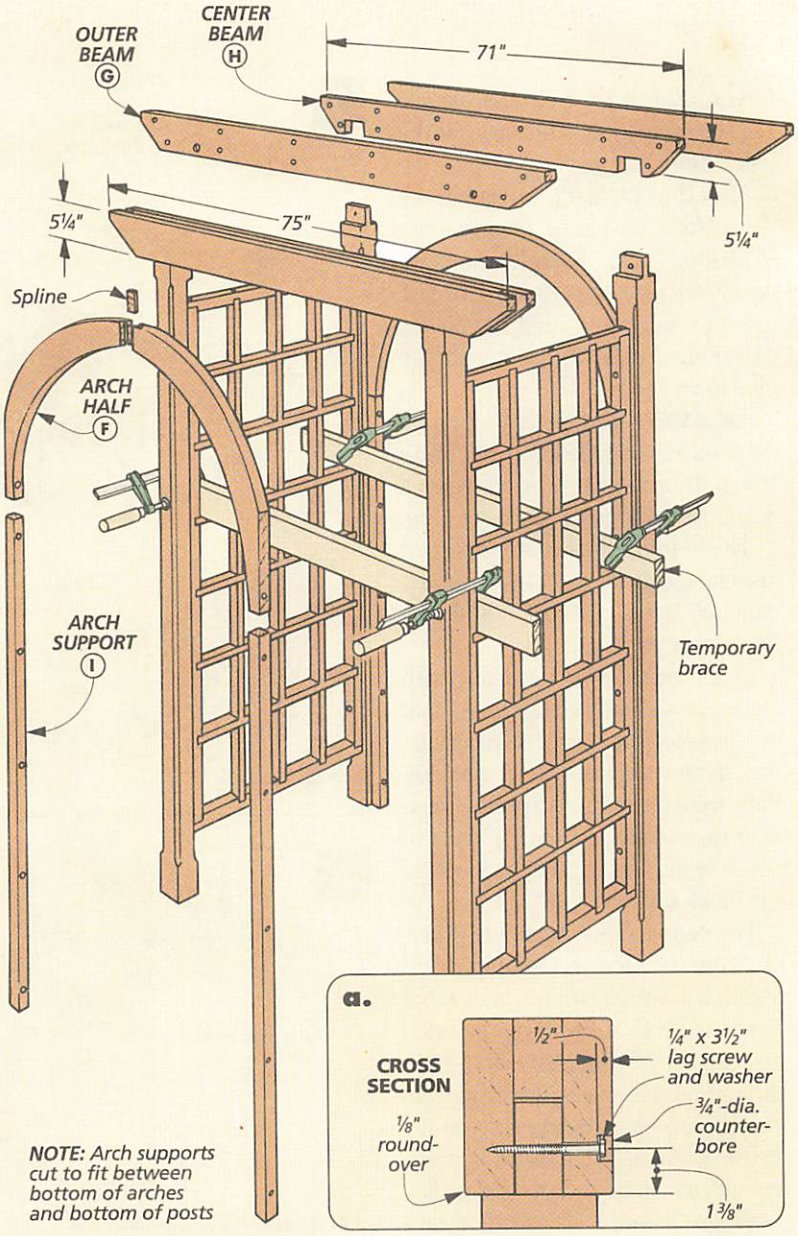

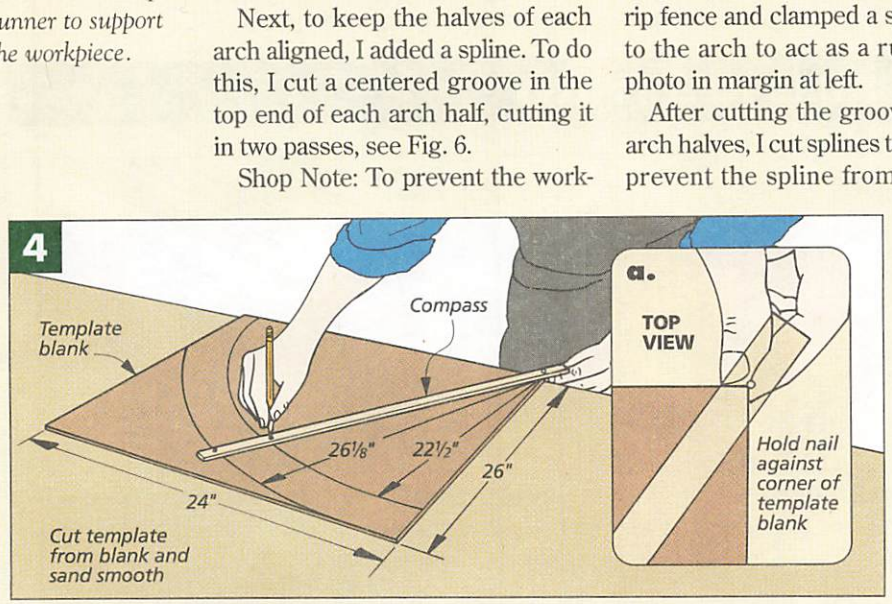

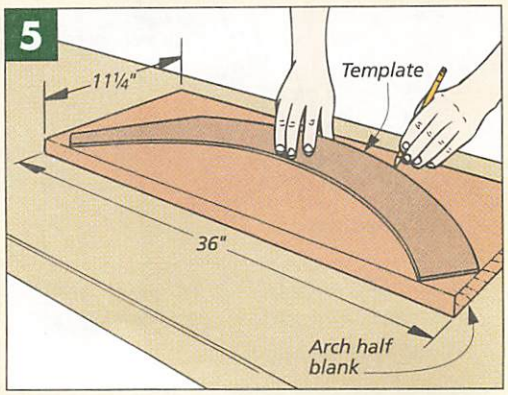

in" by the posts and cross beams, it's important that they end up square. One easy way to check this is to make sure the flat edges along the outside are parallel. So before the glue has a chance to set up, measure across the arch assembly at the top and bottom of these flat edges to make sure the dimensions are the same, see Fig. 7. (Mine were 48".)

All that's left to complete the arches is to rout 1/8" roundovers along the curved edges, see Fig. 7a.

CROSS BEAMS. Now, work can begin on the cross beams, see drawing on page 10. Each beam is a lamination of three *nearly* identical 2x6s: two **outer beams (G)** and a shorter **center beam (H)**, see Fig. 8.

Before laminating the pieces, I created the mortises for the tenons on the posts. This is easy to do. Just cut two notches in the center beams — the outer beams will form the cheeks of the mortise, see Figs. 8 and 8a. Note: The distance between these notches should equal the final width of the arches (48").

When the notches are complete and the bevels on the ends of the beams are cut, I began gluing and screwing the beams together. But work from outside in so the screws end up on the inside faces, see Fig. 8b. (And be sure to offset the screws.)

When the glue is dry, all that's left is to rout a 1/8" roundover on the edges and drill counterbored pilot holes so you can "pin" the tenons with lag screws, see detail 'a' in drawing at left.

The trick to adding the arches and beams to the posts is standing the posts upright. But there's an easy solution. What I did was to temporarily clamp braces across the posts, see drawing on page 10.

ARCH SUPPORTS. With the beams and arches screwed in place, I added **arch supports (I)** to the inside faces of the posts, see drawing and Fig. 9. These extend from the arches to the bottoms of the posts. (Mine were 58" long.) And they match the bottom ends of the arches (1½" x 1½" with roundovers on their outside faces).

When the arch supports are complete, they're simply screwed to the posts, see Fig. 9a.

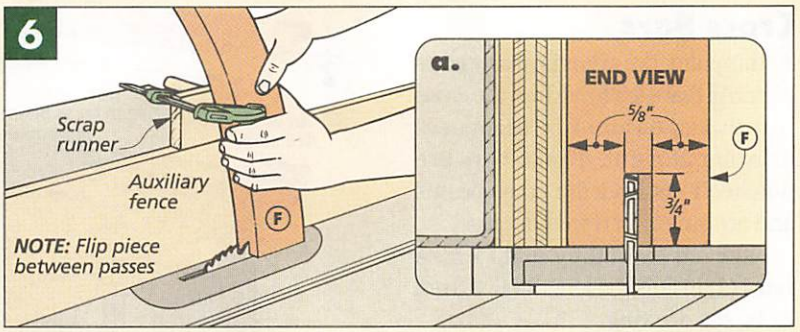

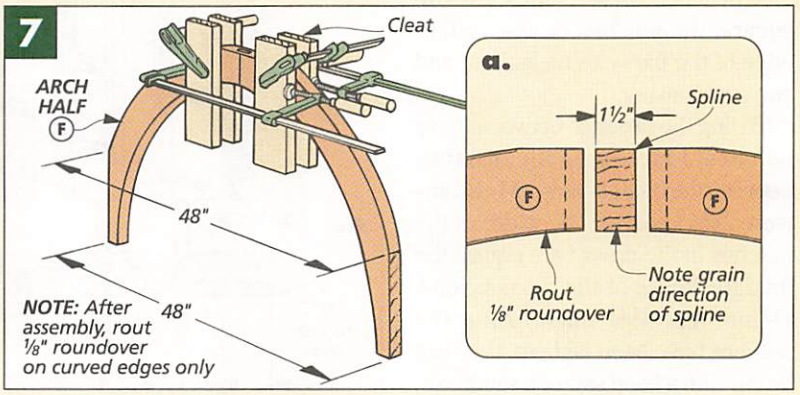

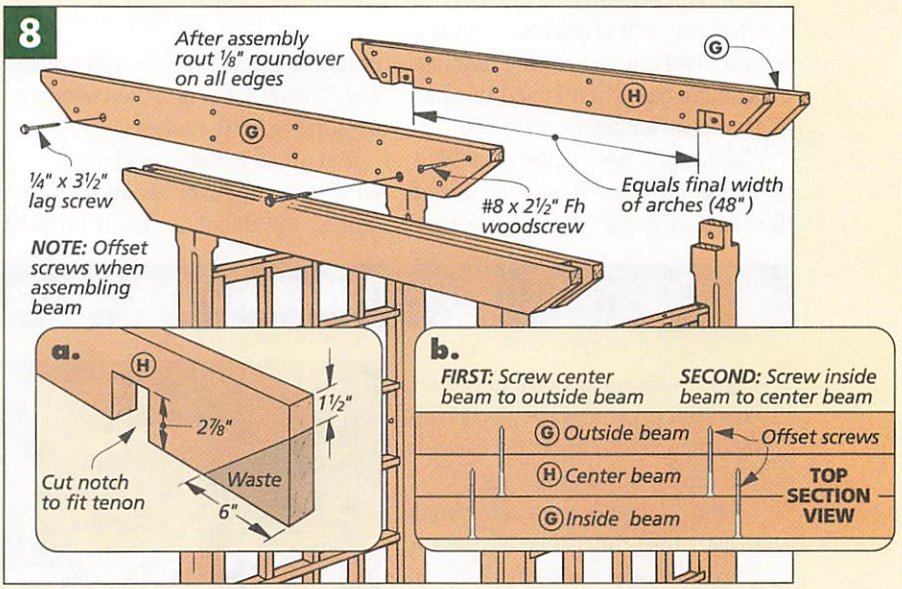

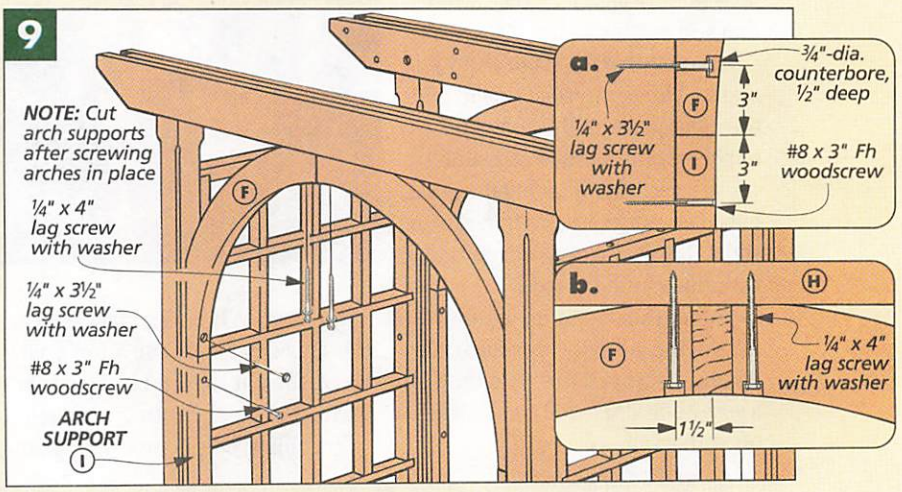

Cross Bars

At this point, the arbor is nearly complete. All that's left to add are the cross bars that lay on top of the beams, see drawing at right. These bars are notched to fit over the cross beams and are simply screwed in place.

I started by cutting eight **cross bars (J)** to finished length (47") from 2x4s, see drawing.

Now while these blanks are still square, the notches on the bottom edge of the bars can be laid out and cut, see drawing.

To find the distance between these notches, I measured the distance between the cross beams. (My beams were 28¼" apart.) The width of the notches in the cross bars equals the final thickness of the cross beams. (Mine were 4½" thick.) After the notches have been laid out, they can be cut with a hand saw or a sabre saw.

Shop Tip: Instead of laying out the notches on each cross bar separately, first I laid out and cut the notches on a single bar. Then I used this bar as a template for laying out the others.

With the notches cut, the next thing to do is cut the bevels on the ends of the bars, see detail 'b' above. Like the notches, I first laid out and cut the bevels on one bar and then used it as a template for the others.

To complete the cross bars, I routed a ⅛" roundover around all their edges, see detail 'a'. Then I drilled pilot holes for screwing them to the cross beams. (The bars are spaced 8" apart, see detail 'a'.) But before screwing the bars in place, I disassembled the arbor and gave it a few coats of finish, see box below.

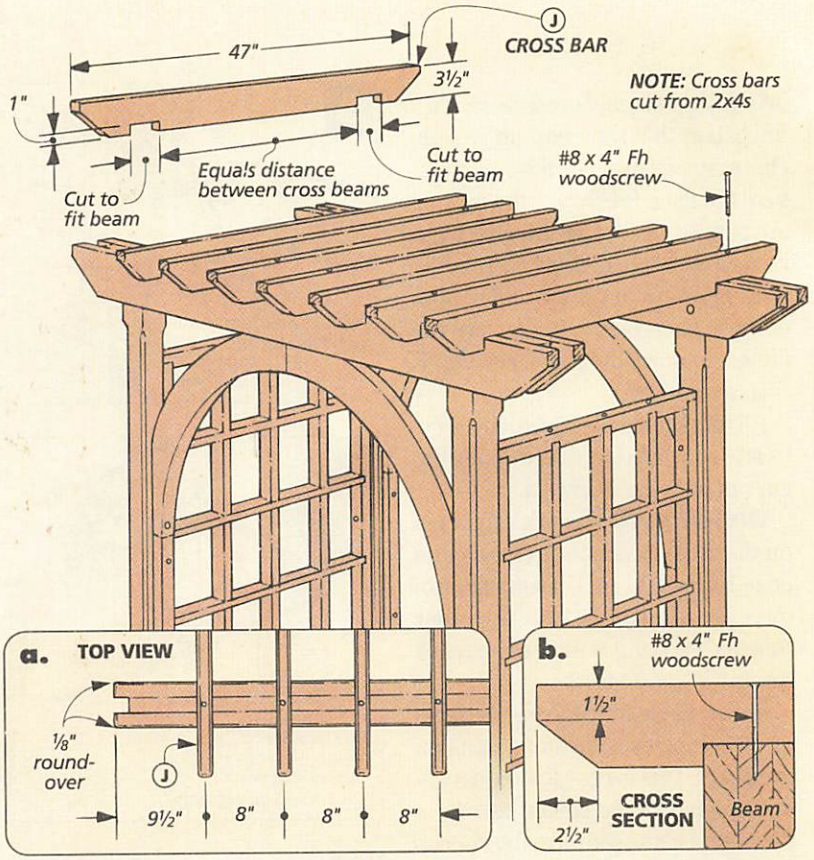

FINISHING THE ARBOR

When finishing an outdoor project, you want to protect the wood from moisture *and* sunlight. Fortunately, you have a number of options.

PAINT. The easiest option is simply to paint the arbor. After all, a coat of latex paint over an alkyd primer will provide a protective coat of finish that will last for years.

SEMI-TRANSPARENT STAIN. But I just couldn't bring myself to paint over the clear grain of the redwood. So to protect the wood from sunlight without completely hiding the grain, I used an exterior, semi-transparent stain. (It will also even out any color variations in the wood.)

To get the stain into all the corners of the lattice screen and cross beams, I sprayed the stain on with a spray bottle. Then it can be wiped off with a rag.

TOP COAT. When the stain is dry, the arbor is ready for a top coat. Here, the choice is typically a spar varnish or a penetrating oil finish.

For this arbor, I chose an oil finish (General Finishes' Outdoor Oil). It isn't quite as durable as varnish, but it's much easier to apply — and reapply when the arbor needs a fresh coat next year.

Arbor Installation

After all the parts of the arbor are finished, the last thing to do is haul them out to your lawn or garden and reassemble the arbor. This isn't terribly difficult. But getting the site ready can be a project in itself. There are a number of ways to install the arbor. But no matter how you do it, the key is to get everything level.

To install our arbor, we decided to use tubular paper concrete forms (Sonotubes), concrete anchors, and L-brackets, see drawing at right.

CONCRETE FORMS. The first thing to do is carefully stake out the location of the arbor. The ground here should be fairly level. But rather than trying to level the ground perfectly, we decided to pour concrete pads and make sure they were level. That's where the sonotubes come in handy. These concrete forms can be set so they end up level with each other. (To check the forms, you can cut a long straightedge and set a level on top of it.)

ANCHORS. With the concrete poured and dried, the arbor can be set in place and fastened to the concrete pads, see detail 'a' at right. To do this, I used concrete anchors and L-brackets.

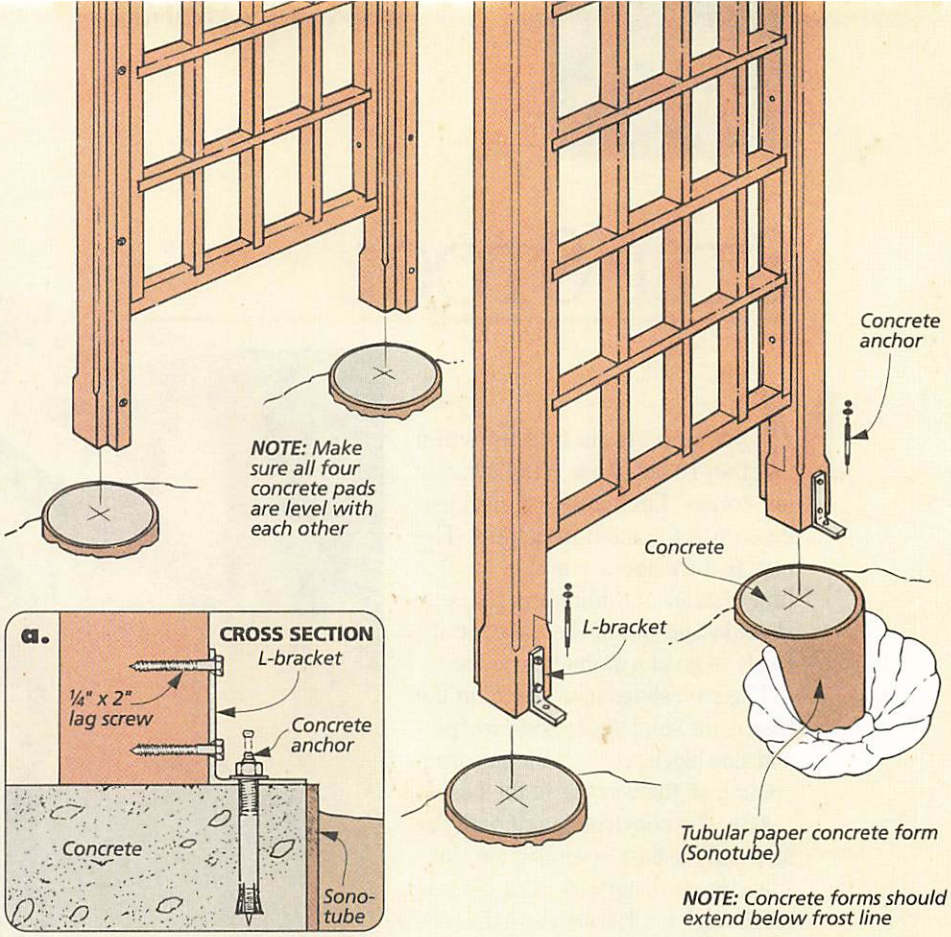

There are a number of different expanding anchors to use. The ones I found expanded when a pin was driven into them. (You'll need a hammer drill to drill the pilot hole.)

To get the L-bracket to fit over the anchor, I had to enlarge the hole, see detail 'a'. Then when the L-bracket is bolted down, it can be screwed to the arbor with lag screws. W

MATERIALS

A	Posts (4)	3½ x 3½ - 86¾
B	Vert. Dividers (6)	1½ x ¾ - 69
C	Horiz. Dividers (12)	1½ x ¾ - 27¾
D	Screen Sides (4)	1½ x 1½ - 69
E	Screen Ends (4)	1½ x 1½ - 29¼
F	Arch Halves (4)*	1½ x 11¼ - 36 rgh.
G	Outer Beams (4)	1½ x 5¼ - 75
H	Center Beams (2)	1½ x 5¼ - 71
I	Arch Supports (2)	1½ x 1½ - 58
J	Cross Bars (8)	1½ x 3½ - 47

*Also Needed: 24" x 26" hardboard panel for template

SUPPLIES

- (4) ¼" x 4" Lag Screws w/Washers*
- (8) ¼" x 3½" Lag Screws w/Washers
- (36) #8 x 3" Fh Woodscrews
- (44) #8 x 1½" Fh Woodscrews
- (48) #8 x 2½" Fh Woodscrews
- (16) #8 x 4" Fh Woodscrews
- (4) Concrete Forms and Concrete
- (4) Concrete Anchors
- (4) Mounting Brackets w/Lag Screws

*Note: Use exterior grade hardware.

CUTTING DIAGRAM

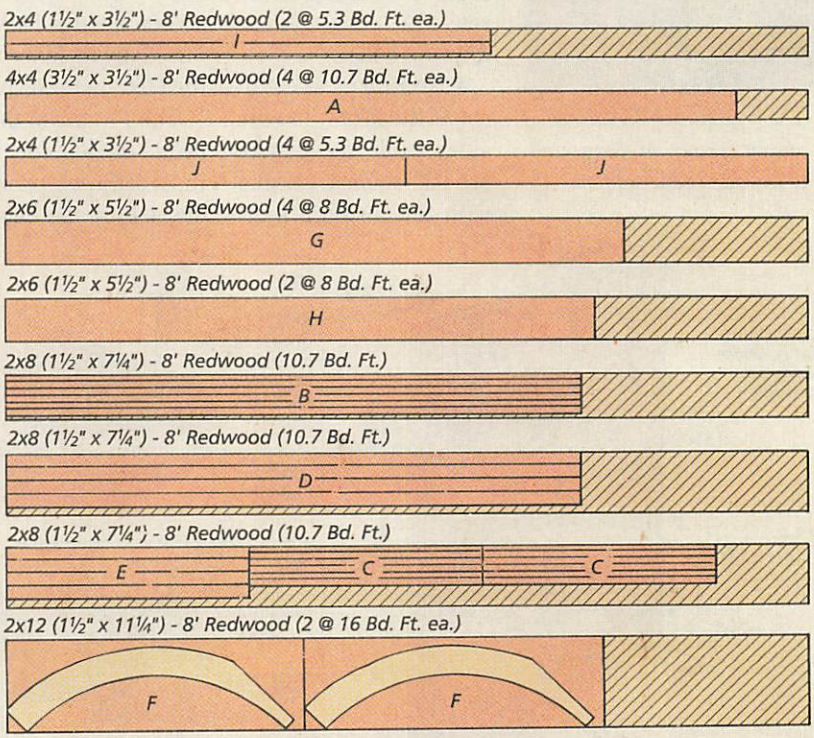

STEP STOOL

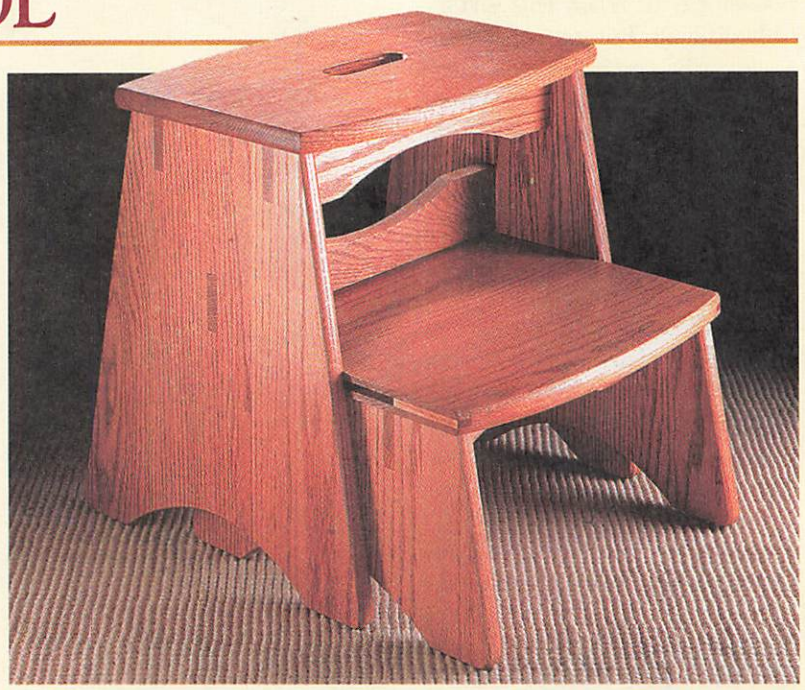

Most step stools fold up when they're not in use. This is handy for storage, but not very convenient if you use the stool frequently. The nice feature about our step stool is that instead of folding up, the step *slides* in and out of the base. So it's ready to go at a moment's notice.

The step slides in a "track" in the base of the stool. And a system of pins and stop blocks prevent the step from coming all the way out of the base.

BASE. The construction of both the step and the base is similar, but since the step is designed to fit closely inside the base, I started with the base and then built the step to fit.

The platform of the base is made up of five pieces — two sides and three rails, see drawing on next page. (A top is added later.) I started off by gluing up a couple $^3/_4$"-thick blanks for the **sides (A)** and cutting them to size (14" x 15$^1/_4$"), see drawing below.

▲ *The bottom step slides out and sits firmly on the ground to provide stable support.*

MORTISES. It's easiest to cut all the joinery on the sides while the blanks are still square. I began with the through mortises that will be used to join the sides with a set of rails.

The mortises at the top of each side piece are really notches — they're open at one end. I cut these on the table saw in a series of passes, see Figs. 1 and 1a. But since the notches are the same distance from each side, I used my rip fence as a stop, flipping the piece between passes.

Then to make the mortise in the center of each side piece, I drilled out most of the waste on a drill press and cleaned up the edges with a chisel. (For more on this, see page 18.)

Before cutting the sides to shape, I completed the "track" that the step slides in. This is nothing more than a dado cut on the inside face of each side piece, see drawing. But when cutting this dado, pay close attention to the width. To keep the step from binding, it should be $^1/_{16}$" wider than the thickness of the stock you will use to build the step. (I made trial cuts in a piece of scrap to "fine-tune" the width of the dado.)

With the joinery out of the way,

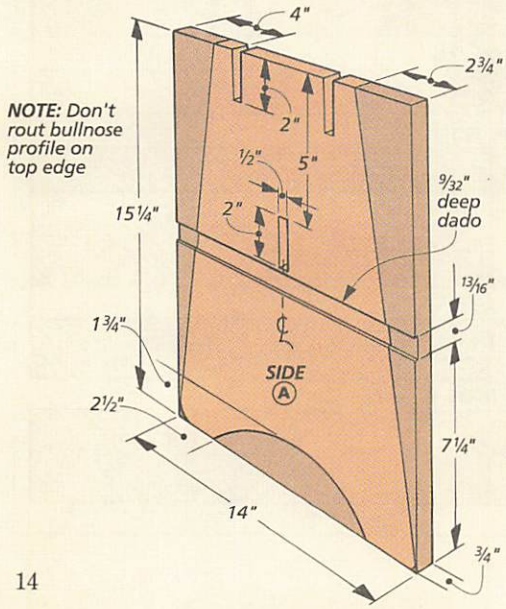

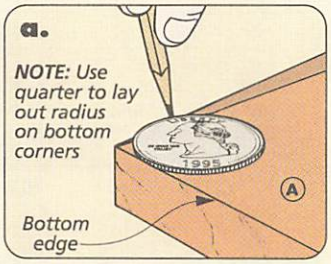

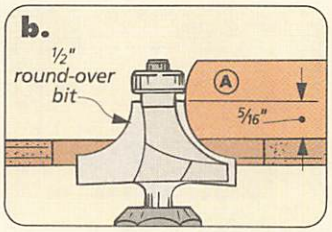

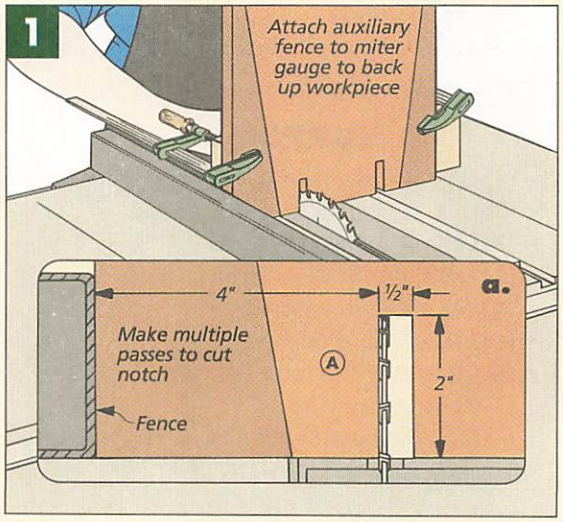

the sides can be cut to their finished shape. I started by laying out the angles along the sides and the curves on the bottom of each piece, see drawing on previous page. With a band saw, I cut away the waste. Then I sanded and planed the edges smooth.

The bottom corners of the base are rounded to prevent them from splintering. Shop Note: A twenty-five cent piece makes a good template for laying out these rounded corners, see detail 'a' on previous page.

To complete the sides, I routed a bullnose profile around each piece, except along the top edges (this is where the top will sit). This is done with a router and a 1/2"-radius roundover bit that is set 5/16" deep, see detail 'b' on previous page.

RAILS. Once the sides were complete, I began work on the three **rails (B)** that connect them. These pieces are identical — the only difference is that the two top rails will be drilled for screws to attach them to the top of the stool, see drawing above right.

The tenons on the rails need to match the thickness of the side pieces (3/4"). (I made mine a hair longer and trimmed them flush after assembly, see page 18.) But the important thing is to make sure that the shoulder-to-shoulder distance is the same on all three rails (14 1/2"), see detail 'c'.

Once the tenons are cut, countersunk screw holes can be drilled in *two* of the rails, see detail 'c'. This will provide a means of attaching the top.

CURVES. After drilling the screw holes, curves can be laid out on one edge of each rail, see detail 'c'. Then the waste can be cut away on a band saw and the curves sanded smooth.

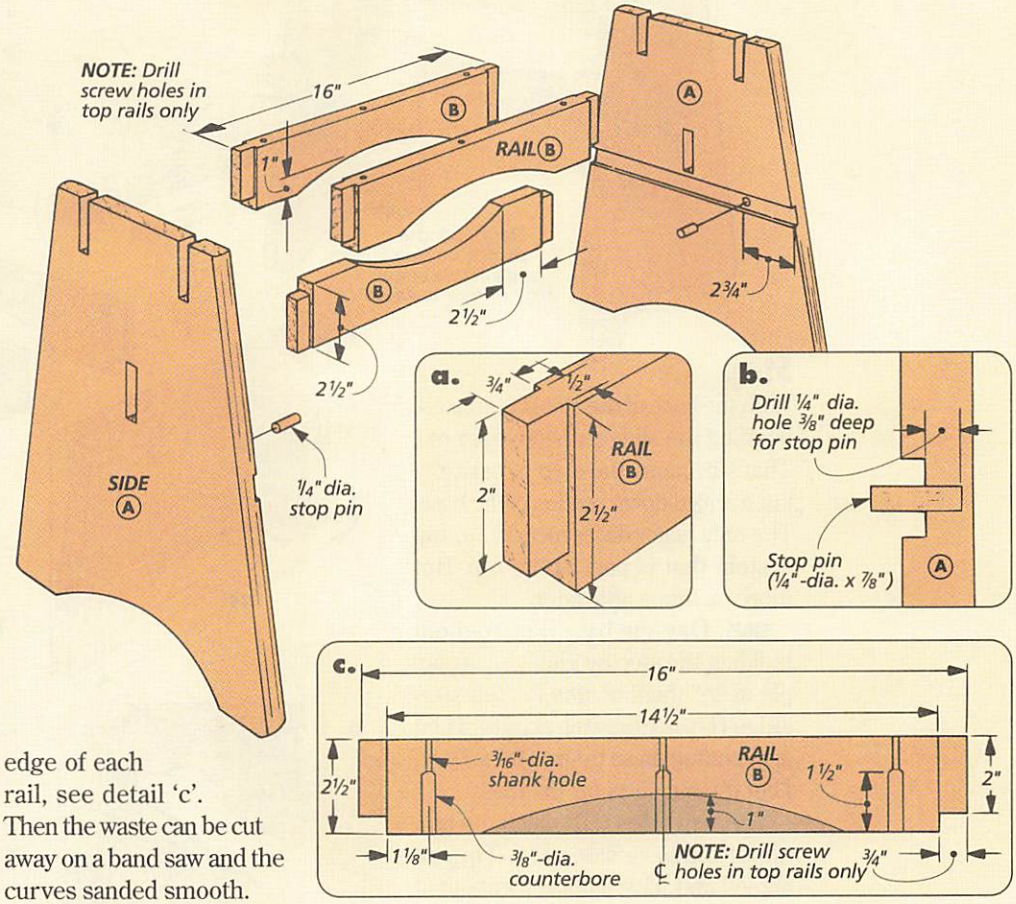

STOP PIN. There's one more step before gluing up the sides and rails. To prevent the step from being pulled completely out of the base, a 1/4"-dia. hardwood dowel pin is glued into a hole drilled in the dado on each side piece, see detail 'b'. These pins will limit the travel of the step. But more on this later.

ASSEMBLY. Gluing up the rails and sides is pretty straightforward. Just be sure to pay attention to the orientation and position of the rails. The two rails with the screw holes fit at the top of the base. And while the curves on these rails face down, the curve on the center rail should face up, see drawing above.

TOP. The last step to complete the base is to add a **top (C)**. There's nothing tricky here — it's just a 3/4"-thick glued-up blank that's cut to size and shape, see Figs. 2 and 2c.

To make it easier to lift the step stool, I made a cut-out in the center of the top, see Fig. 2a. Then before screwing it to the base, I routed a bullnose profile on all the edges, including the inside of the hand cut-out, see Fig. 2b.

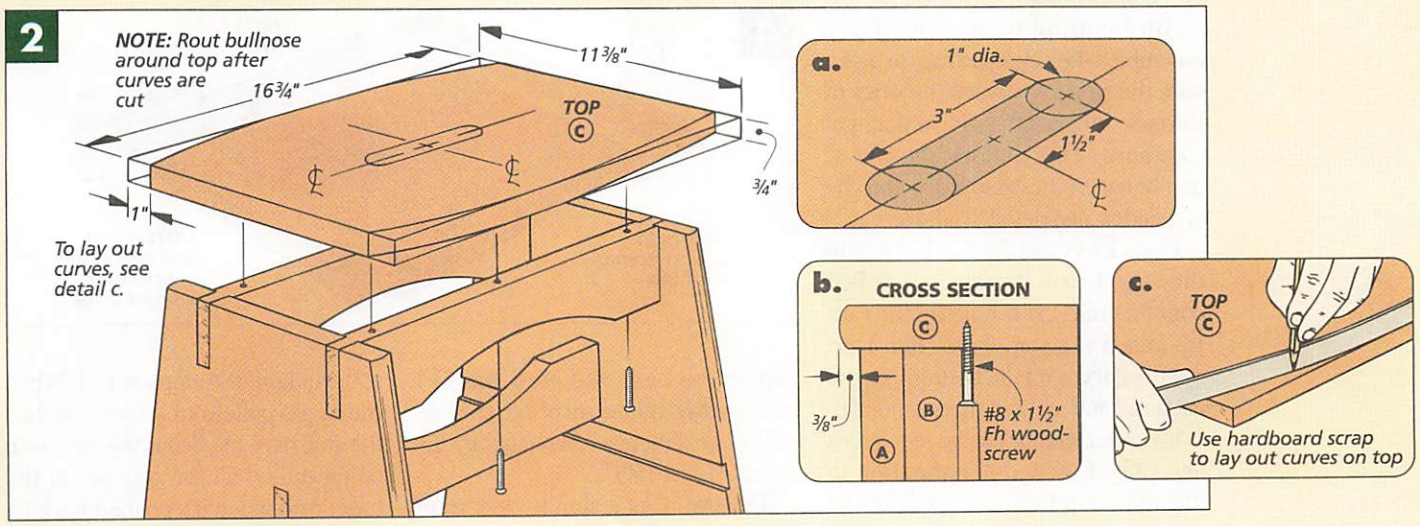

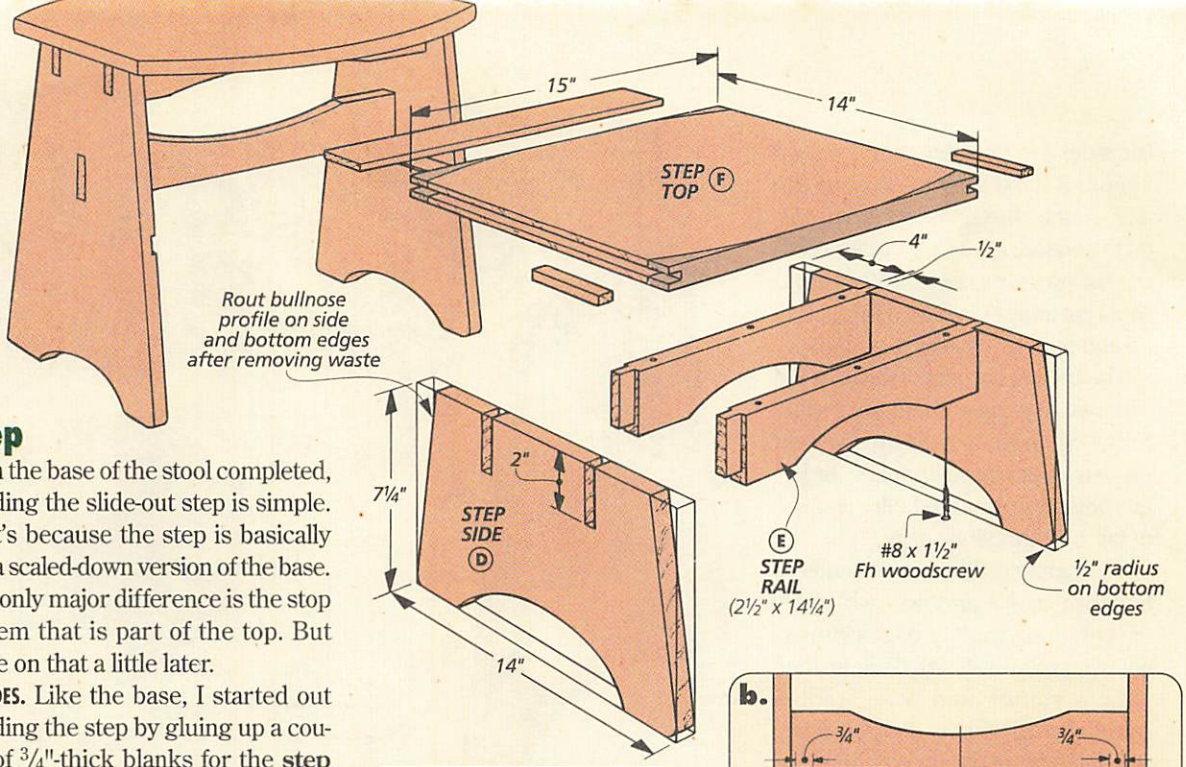

Step

With the base of the stool completed, building the slide-out step is simple. That's because the step is basically just a scaled-down version of the base. The only major difference is the stop system that is part of the top. But more on that a little later.

SIDES. Like the base, I started out building the step by gluing up a couple of ¾"-thick blanks for the **step sides (D)**, see drawing at right. Then after cutting these to size (14" x 7¼"), I cut the mortises for the rails.

The step sides (D) match the profile of the base sides (A). They're angled and have a curved cut-out at the bottom. So this time, I didn't have to do any measuring for the layout—I just traced them, see detail 'a'.

After cutting the sides to shape and sanding the edges, I routed a bullnose profile on all but the top edges, to match the bullnose on the base.

RAILS. The step sides are joined by a pair of **step rails (E)**. These pieces are cut to size and tenons are cut on the ends to fit the mortises in the sides. But since this distance will determine the final width of the step, the important thing to watch here is the shoulder-to-shoulder distance of the tenons (12¾" in my case), see detail 'b'.

After cutting the tenons, I dry assembled the sides and rails to make sure the step fit between the sides of the base with just the right amount of clearance. There should be an ⅛" gap between the base sides and the step sides, see detail 'b' above.

Once I was satisfied with the fit of the step, I took it apart and drilled countersunk screw holes in the rails (to attach the step top). Then I cut out the curves on the bottom edge of each rail and sanded them smooth.

TOP. After gluing up the step sides and rails, I turned my attention to making a top for the step. Like the top on the base, the **step top (F)** starts off as a glued-up blank, see Fig. 4. But the dimensions are slightly different (14" x 15").

The top uses a simple system of stops to limit the step's travel. When the step is pulled out, a back stop hits the stop pins and keeps the step from being pulled all the way out of the base. And when it's pushed back in,

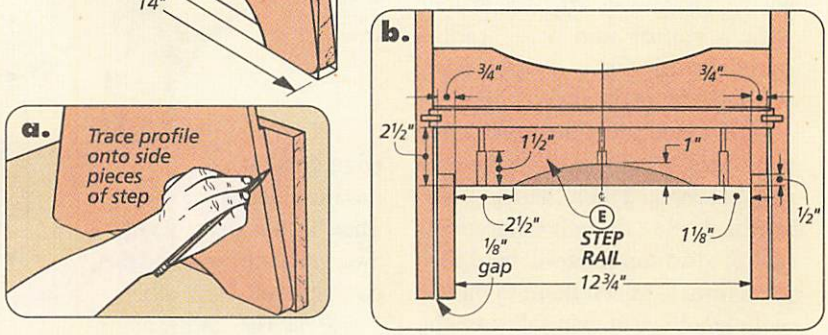

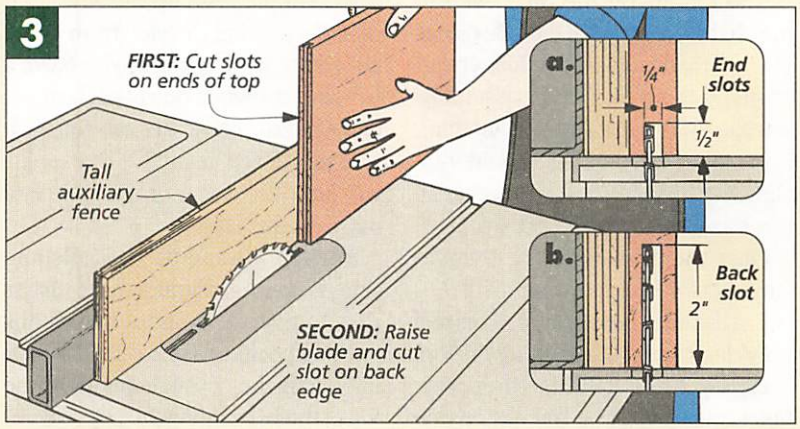

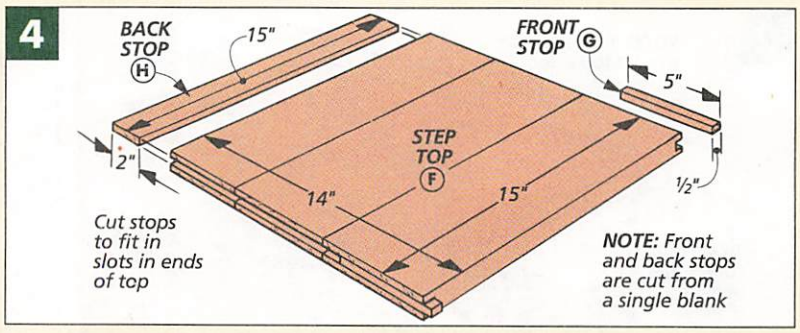

stops at the front of the top prevent the step from being pushed in too far.

These stops are fitted into slots that are cut on the sides and back edge of the top, see Fig. 3. First I cut the ¼"-wide slots on the ends of the top, see Fig. 3a. Then I raised the blade and cut a deeper slot along the back edge of the top, see Fig. 3b.

STOPS. The stops are cut from a single 2"-wide blank that is thicknessed to match the width of the slots in the edges of the top. I cut the two **front stops (G)** to width first, but I left them a little long (5") at this point.

The front stops ensure that the step will be centered in the base when it's pushed all the way in. To determine the length and position of these stops, just slide the step top into the base, center it from front to back and insert the stops in the slots until they touch the stop pins, see Figs. 5 and 5a.

After marking the length of the stops, they can be removed, cut to size, and then glued back in place.

BACK STOP. The **back stop (H)** is a little different. It gets screwed in place rather than glued, see Figs. 6 and 6a. This way, you can remove it in order to get the step in and out of the base for finishing or repair. (Note: The back stop is screwed in place from the underside of the top.)

After screwing the back stop in place, the curves can be laid out, cut, and sanded smooth. Then I routed the same bullnose profile on the front and back edges of the top.

ATTACHING THE TOP. When it came time attach the top to the sides and rails of the step, I wanted to make sure that the sides of the step would line up with the sides of the base. To do this, I removed the back stop and centered the step top in the base. Then I marked the location of the screw holes on the underside of the top. Now the side and rail assembly can be glued and screwed to the step top, see Figs. 7 and 7a.

Finally to finish the stool, I removed the back stop and step and applied a golden oak stain. Then I wiped on three coats of an oil finish. W

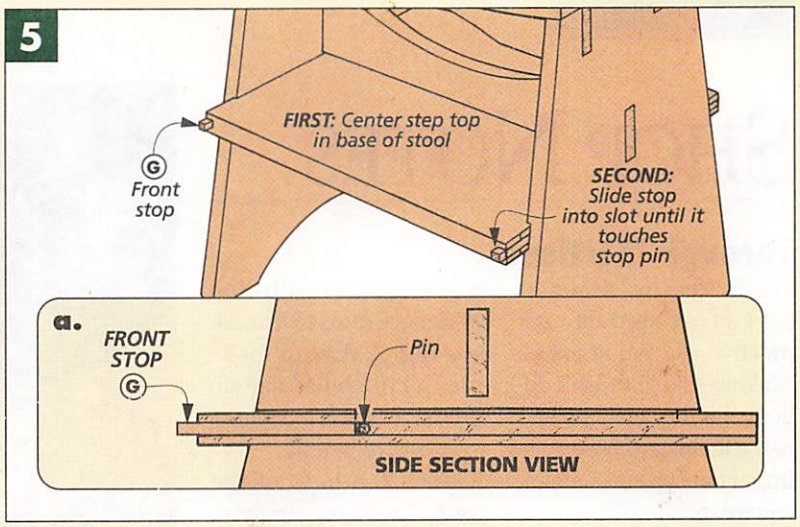

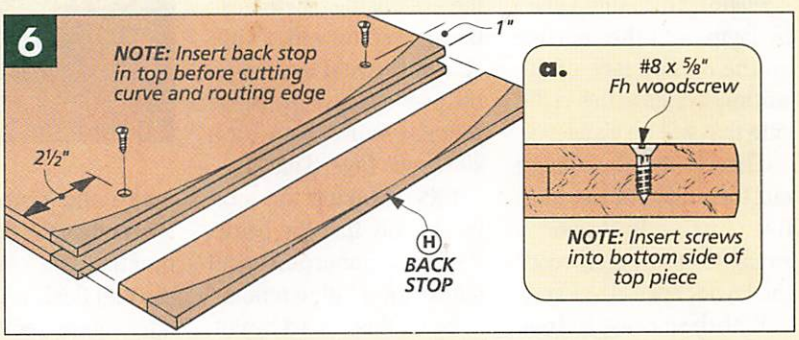

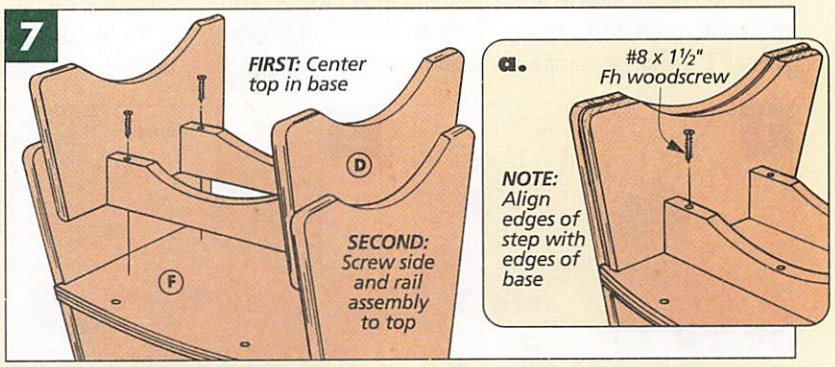

MATERIALS

A	Sides (2)	¾ x 14 - 15¼
B	Rails (3)	¾ x 2½ - 16
C	Top (1)	¾ x 11⅜ - 16¾
D	Step Sides (2)	¾ x 7¼ - 14
E	Step Rails (2)	¾ x 2½ - 14¼
F	Step Top (1)	¾ x 14 - 15
G	Front Stops (2)	¼ x ½ - 5 rgh.
H	Back Stop (1)	¼ x 2 - 15

- (12) #8 x 1½" Fh woodscrews
- (2) #8 x ⅝" Fh woodscrews

CUTTING DIAGRAM

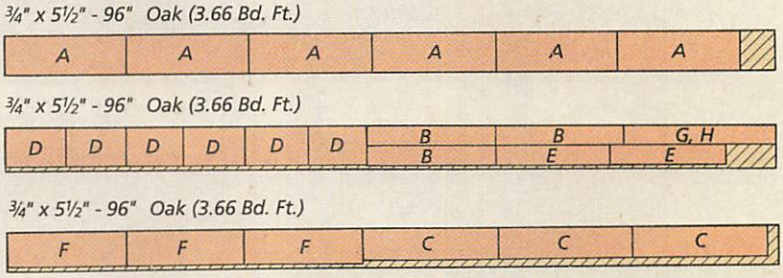

SHOP NOTES

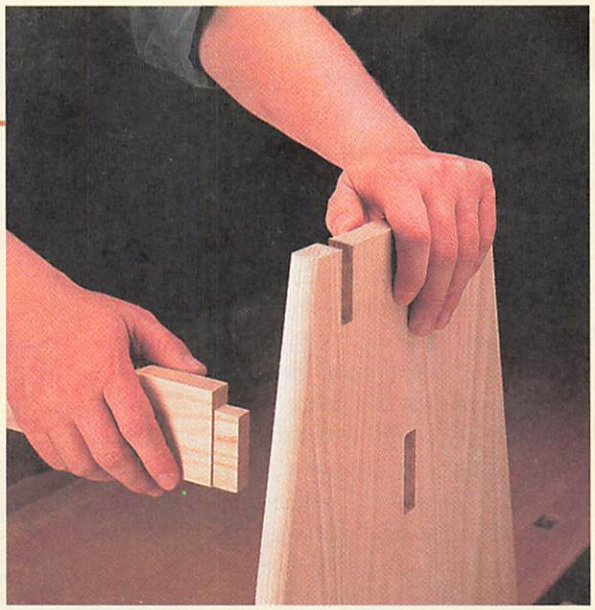

Through Mortises

For the step stool shown on page 14, we used through mortise and tenon joints. Making this joint isn't difficult, but because the end of the tenon is exposed, it's important to cut a clean, square mortise.

MORTISE. To do this, I start by laying out the mortise on the *outside* face of the workpiece, since this is the side that will be visible.

Then to avoid chipping out the edges of the mortise, I use a knife and a straightedge to lightly score the layout lines, see Fig. 1.

With the mortise laid out, the next step is to drill out the waste on a drill press. Here, I place a backer board underneath the workpiece to avoid tearout, see Fig. 2. And to make sure all the holes line up evenly, I attach a fence to my drill press table.

Once the bulk of the waste has been removed, the sides of the mortise can be squared up with a chisel. But to avoid tearout on the inside face of the workpiece, I work from both sides, see Figs. 3 and 4.

TENON. Making the mortise is only half the battle. It's just as important to cut a nice, tight-fitting tenon.

To do this, I start by cutting my workpiece slightly longer than necessary (about 1/16"). This way, I can make the tenon a hair longer than the depth of the mortise and simply pare the end flush with a chisel after the project is assembled, see Fig. 5.

To lay out the tenon, I take measurements directly from the mortise. Then when cutting the tenon, I make it a little fat and sneak up on the final size until I get a good, snug fit.

Finally, I number each mortise and tenon to make assembly a little easier.

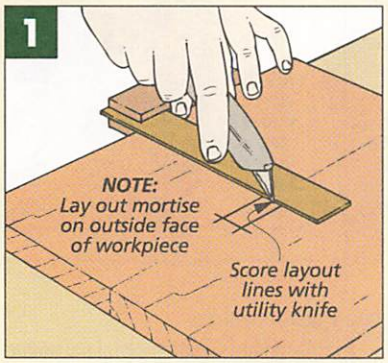

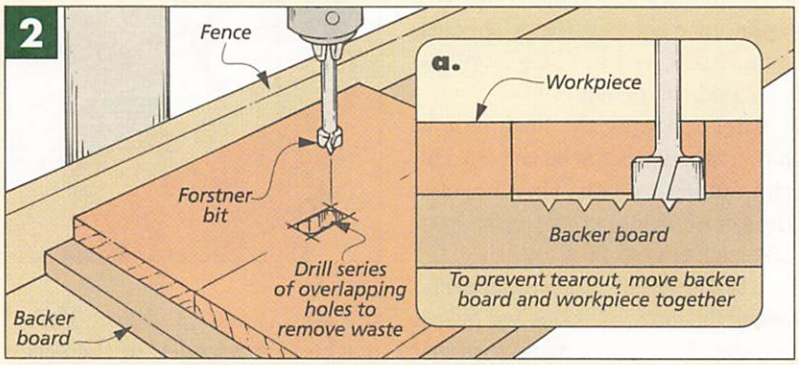

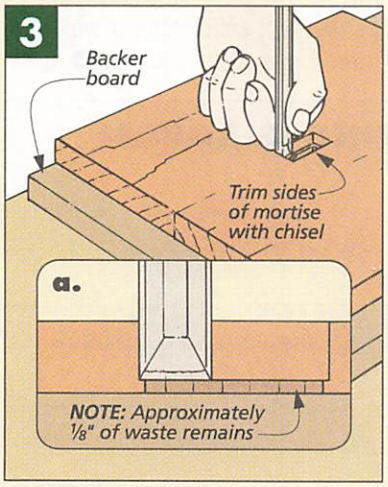

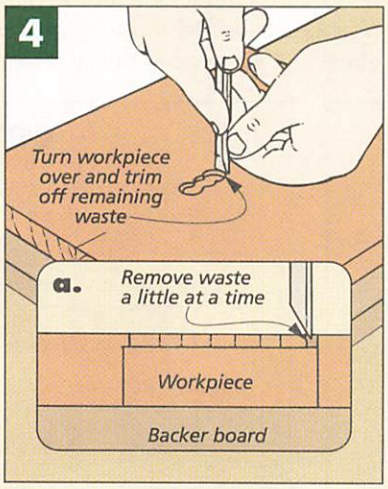

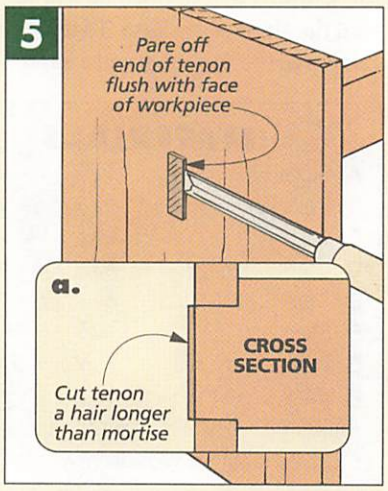

Laminated Posts

Depending on where you live, you may have a tough time finding nice,straight 4x4 redwood posts for the garden arbor on page 6. (We had to search three different lumberyards.)

Fortunately, there's an easy alternative. You can "make" your own posts by gluing up straight pieces of thinner stock.

In order to get the necessary thickness and width, just sandwich a 1x6 between a couple 2x6's, see Fig. 1. But before gluing the pieces together, rip the edges to remove the "factory" roundovers.

Then to keep the pieces flush while gluing them up, just use some scrap blocks, see Fig. 2.

Once the glue dries, the posts can be trimmed down to final size on a jointer or a planer, see Fig. 3.

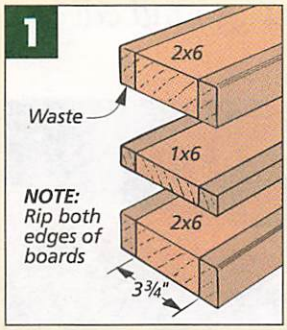

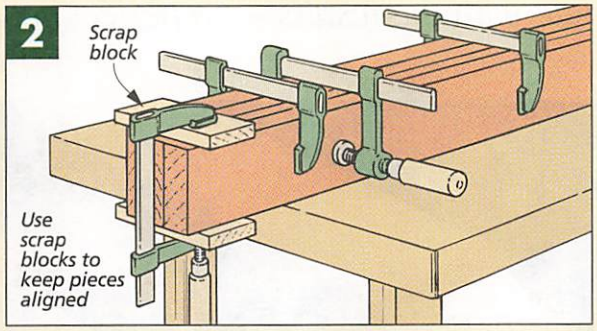

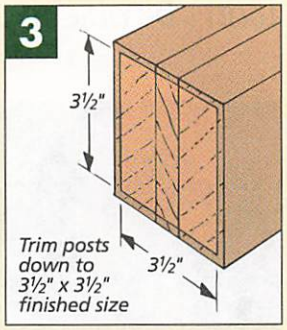

Tenons on Posts

When it comes to making tenons, I typically cut them on the table saw. But because the posts of the garden arbor are so long (nearly 8 feet), I decided to use a tool I don't get to work with all that often.

To cut these tenons, I found it quickest and easiest to use a hand saw. (Although you could also use a circular saw, see box below.) To do this, just start by laying out the tenon with a knife and a straightedge.

Next, use a sharp hand saw to make the cheek cuts on both sides of the tenon. Try to stay just to the waste side of your layout lines.

GUIDE BLOCK. To help ensure a straight cut when making the shoulders of the tenon, clamp a guide block to the post right along the layout line. Then use the block to guide your saw during the cut.

Finally, if necessary, clean up the faces of the tenon with a sharp chisel.

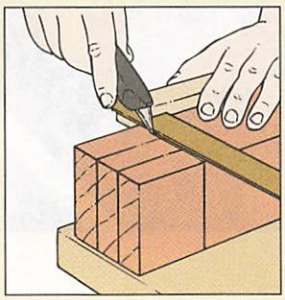

Lay out tenon. Score the layout lines with a utility knife to prevent splintering.

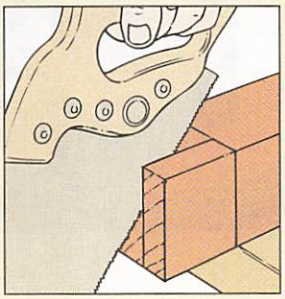

Start cheek cut. Hold the the saw at a 45° angle to the end of the workpiece.

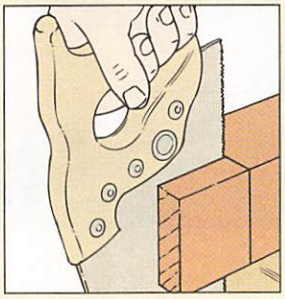

Complete cuts. As you reach the bottom of the cut, square up the saw.

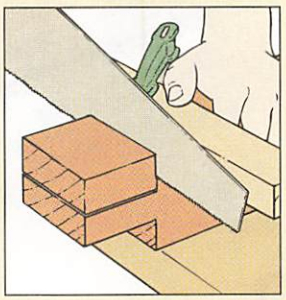

Cut shoulders. A guide block clamped along the layout line guides the saw.

CIRCULAR SAW METHOD

If the thought of using a hand saw to cut the tenons on the garden arbor posts doesn't appeal to you, a hand-held circular saw is another possible option.

MAKE KERFS. All you have to do is set the depth of cut to match the shoulder depth of the tenon. Then cut a series of kerfs until you reach the shoulder line of the tenon, see first drawing. (Note: Start cutting the kerfs at the end of the post and work in so that the saw will always be firmly supported.) Now just flip the post over and cut kerfs on the other side of the tenon.

REMOVE WASTE. To finish the tenon, just knock the waste off with a couple blows from a hammer or mallet. Then clean up the faces of the tenon with a wide chisel, see second drawing at right.

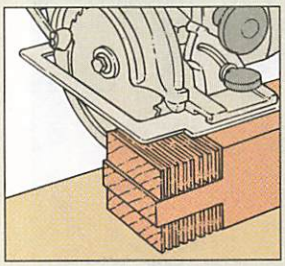

Cut kerfs. Starting at the end of the post, cut a series of kerfs across the tenon.

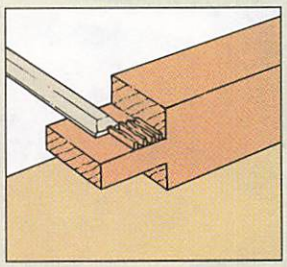

Remove waste. Knock off waste with a hammer. Then chisel sides clean.

LOW-SPEED GRINDER

Sharpen a chisel on the table saw? It might sound a bit crazy, but you won't be able to argue with the results — a perfect hollow ground edge.

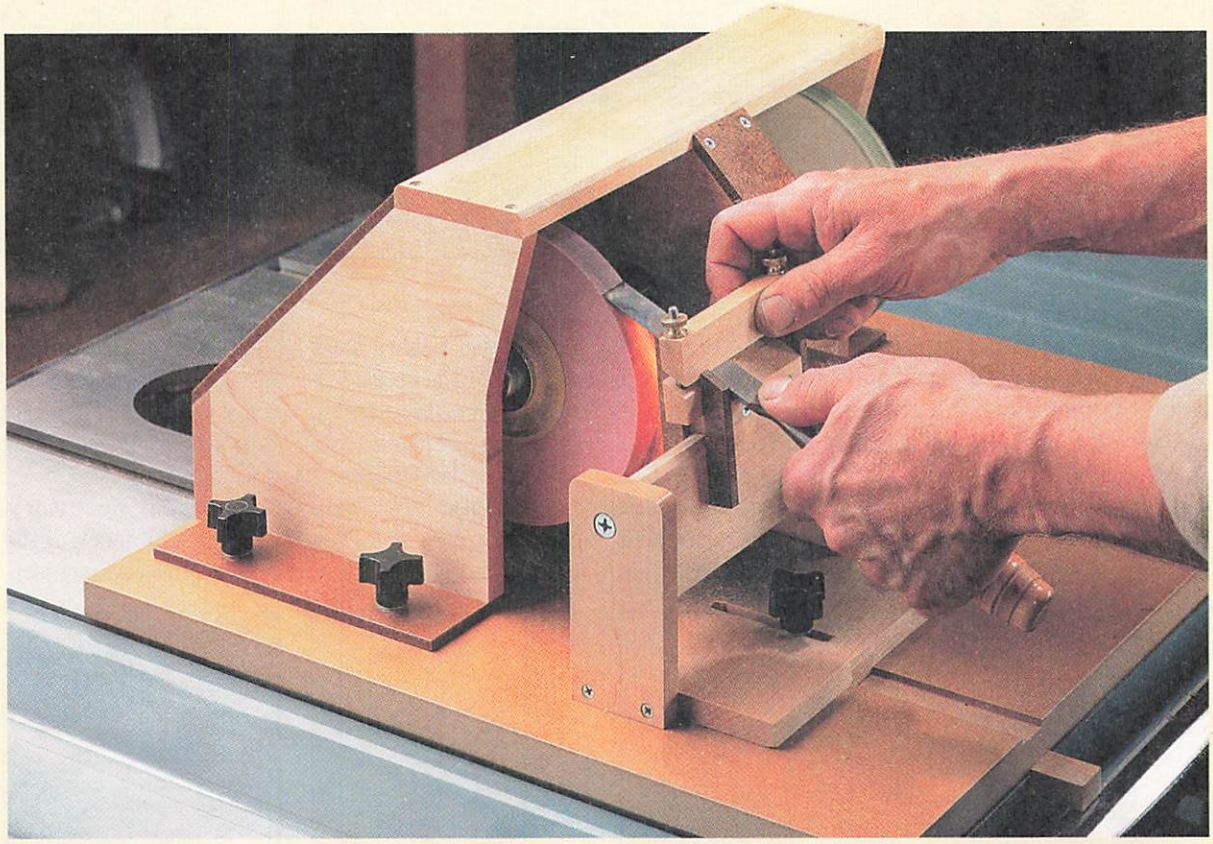

Building a low-speed grinder is something I've wanted to do for a long time. Like any grinder, it puts a hollow ground bevel on a chisel or plane iron, making the sharpening process much quicker, see the sharpening article on page 28. But a low-speed grinder works quickly without burning the metal and ruining the tool. The trick was coming up with a way to do it economically.

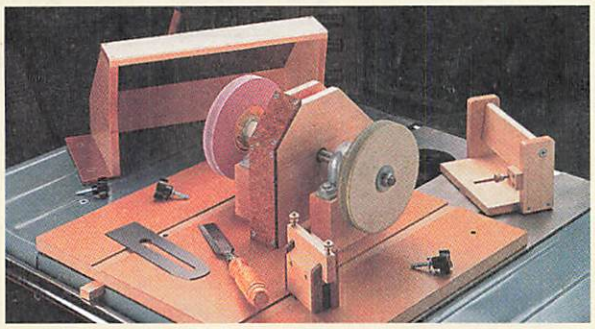

▲ *This jig mounts on top of the table saw and is driven by a belt and pulley mounted on the saw's arbor. The safety hood, carriage, and tool rest can be installed quickly.*

So when Ted, our creative director, suggested that the jig could work on the table saw, I was intrigued. Right off the bat, you're saving money because you don't have to buy a motor. All you need are two pulleys, an arbor assembly, a belt, and a grinding wheel (or two if you like). And since the jig mounts to the saw's table, it doesn't take up any shop space.

To get the power from the motor to the jig, you use the saw's arbor. Simply remove the blade and replace it with a small pulley. A larger pulley in the jig slows down the speed of the grinding wheel to about 1700 rpm.

And as an added bonus, there's also a tool rest and carriage that hold and guide the blade. The tool rest lifts off easily so you can check your progress. And the carriage includes a micro-adjust feature so you don't remove the metal too quickly.

Note: Because this jig requires a lot of hardware, it's a good idea to have it on hand before building the jig. This way, you'll avoid any surprises.

Of course, the real test is how well it sharpens. After using used the jig to sharpen my own tools (as well as some others that suddenly "appeared" on my bench), I'd say it works great.

Exploded View

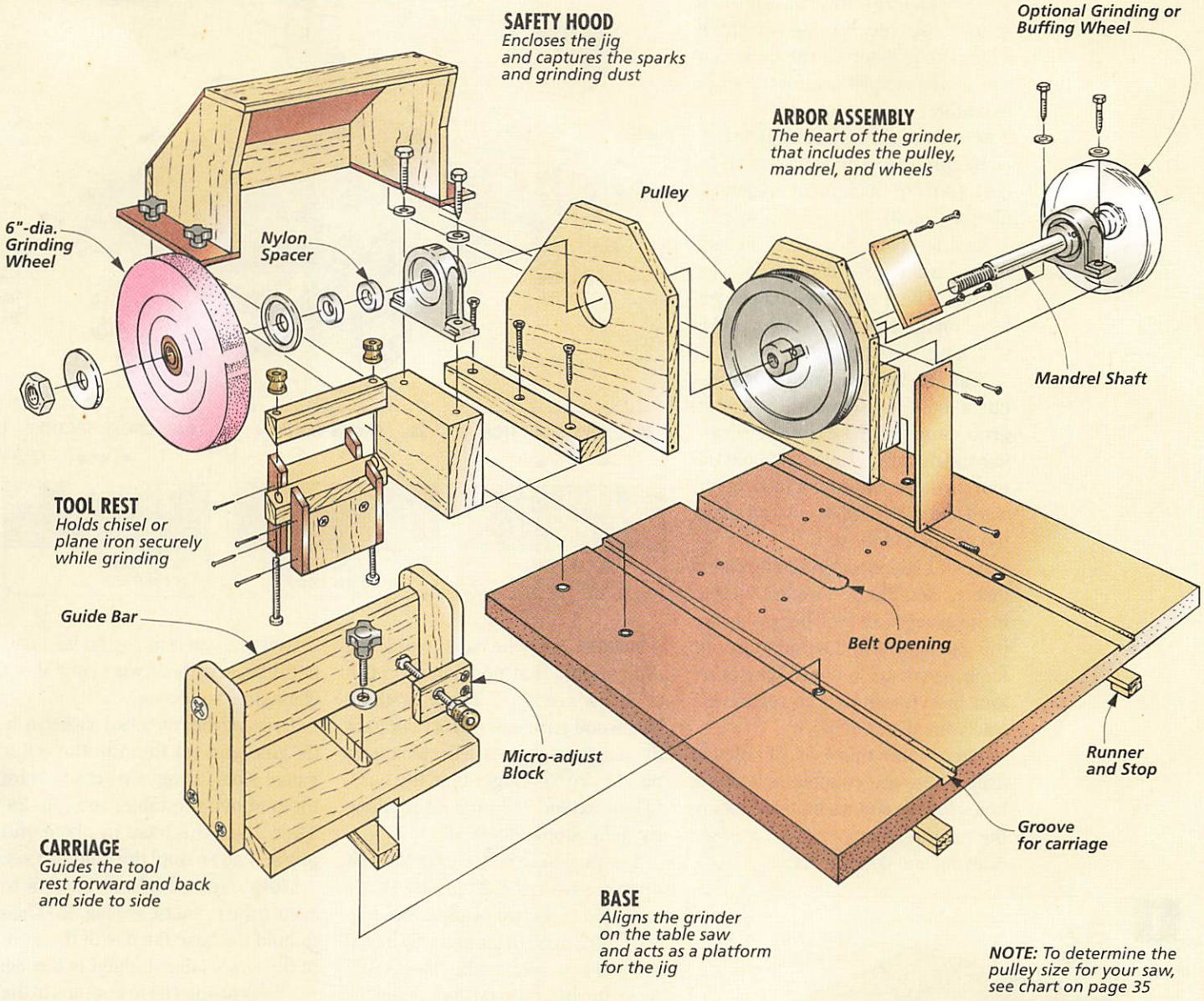

NOTE: To determine the pulley size for your saw, see chart on page 35

MATERIALS

A	Base (1)	¾ MDF - 19 x 20	**I**	Hood Walls (2)	½ x 7⅜ - 7¾	**Q**	Guide Bar (1)	½ x 2½ - 6⅜
B	Base Runners (2)	¼ x ¾ - 19¾	**J**	Flanges (2)	¼ hdbd. - 2¼ x 6⅞	**R**	Adj. Block (1)	½ x 1 - 1½
C	Stops (2)	¼ x ¾ - ¾	**K**	Hood Top (1)	½ x 3 - 13⅝	**S**	Tool Rest Center (1)	½ x 1¼ - 4
D	Dividing Walls (2)	½ x 9¾ - 7⅝	**L**	Hood Back (1)	½ x 2⅞ - 13⅝	**T**	Hold Down (1)	½ x ⅞ - 4
E	Cleats (2)	¾ x 1⅛ - 8½	**M**	Hood Panel (1)	¼ hdbd.- 7 11/16 -13⅝	**U**	Tool Rest Front (1)	½ x 1⅝ - 3 rgh.
F	Mandrel Blocks (2)	1½ x 3 - 4½	**N**	Carriage Base (1)	½ x 4 - 6½	**V**	Tool Rest Back (1)	½ x 2½ - 3 rgh.
G	Pulley Panel (1)	¼ hdbd. - 2 x 5 23/32	**O**	Carriage Runner (1)	⅜ x ¾ - 4	**W**	Front Stops (2)	¼ hdbd. - ½ x 2½
H	Pulley Lid (1)	¼ hdbd. - 2 x 3 3/16	**P**	Carriage Sides (2)	½ x 2 - 4¼	**X**	Back Stops (2)	¼ hdbd. - ½ x 3⅛

SUPPLIES

- (8) #8 x 2½" Fh Woodscrews
- (6) ¼"-20 Threaded Inserts
- (30) #6 x ¾" Fh Woodscrews
- (14) #6 x 1" Fh Woodscrews
- (6) #8 x 1¼" Fh Woodscrews
- (1) 2"-dia. Hub-less Pulley
- (1) 4"- 6"-dia. Pulley
- (4) ½" i.d. x 1" o.d. x ⅜" Nylon Spacers
- (4) ¼" x 1½" Lag Screws w/Flat Washers
- (1) Mandrel Assembly w/ ⅝" Drive Shaft
- (2) Grinding or Buffing Wheels
- (2) #14 x 1½" Fh Woodscrews
- (3) 10-32 Brass Knurled Knobs
- (1) 10-32 Threaded Insert
- (5) ¼"-20 Plastic Star Knobs w/1" Stud
- (1) 10-32 Hex Nut
- (1) 10-32 x 2" Rh Machine Screws
- (2) 10-32 x 2" Fh Machine Screws

Base

The low-speed grinder starts out as a simple base, see drawing at right. It aligns the grinder on the table saw and serves as a platform for the arbor assembly and the tool rest.

BASE. To begin the **base (A)**, I started by cutting it to finished size (19" x 20") from 3/4"-thick medium-density fiberboard (MDF), see drawing.

Next, an opening can be cut in back of the base to provide clearance for the belt. This 1"-wide opening is centered on the width of the base and is 9 3/4" long, see drawing.

With the belt opening complete, I cut a couple 3/4"-wide, 1/8"-deep grooves on top of the base, see drawing and detail 'c'. These will hold the tool carriage, allowing it to slide forward and backward so you can adjust the position of the tool.

Next, I added six 1/4"-20 threaded inserts, see Fig. 1. Two are located in the grooves and will help to secure the carriage with a studded plastic knob, see detail 'c' above. The other four inserts will help to secure the safety hood, see detail 'b'.

There's one more set of holes to drill. These are countersunk shank holes for the screws that will secure the mandrel blocks to the base, see drawing and detail 'a' above.

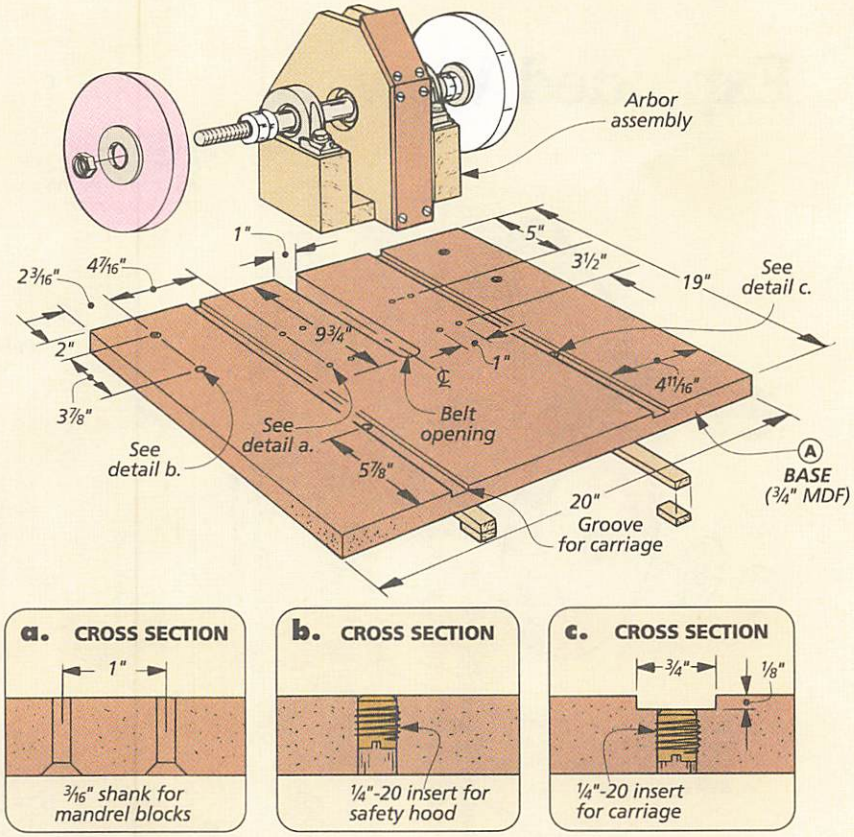

RUNNERS. Now, the base is ready for the runners that position it on the table saw, see Fig. 1. These 1/4"-thick hardwood **runners (B)** are cut to fit the miter gauge slots in the table saw, but they're 3/4" longer than the base. (They extend 3/4" in front to allow room for stops added later.)

The goal here is to center the belt opening over the 2" pulley that's mounted to the saw's arbor, see Fig. 2b. (You'll need to temporarily install the pulley to position the base.) And when the base is in position, slide the saw's rip fence up against it, see Fig. 2. Now you can remove the base and put it back without worrying about changing its position.

To install the runners, I applied a little glue and set them in the miter gauge slots, using washers to shim them above the table, see Fig. 2a. Then I set the base in place and pressed down until the glue had set.

STOPS. Next, I added screws to secure the runners, see Fig. 1a. Then to hold the base flush with the front of the saw's table, I glued two small 1/4"-thick **stops (C)** to bottoms of the runners, see Figs. 1 and 1a.

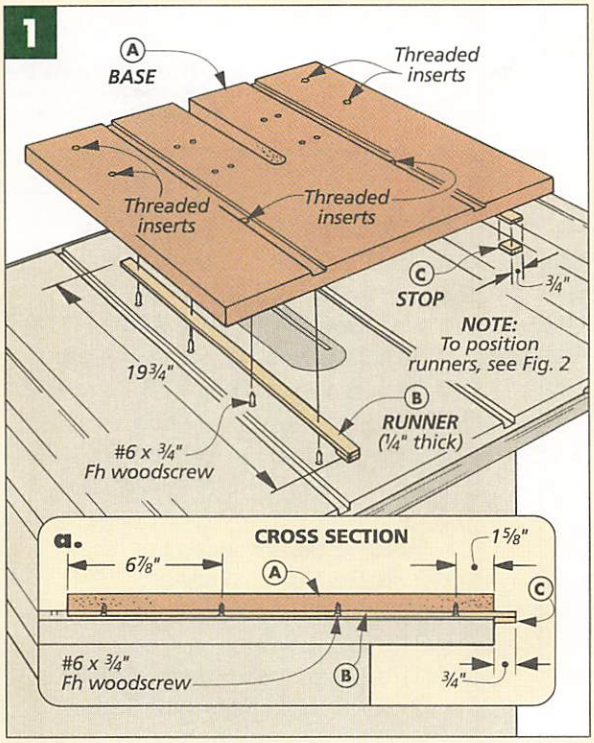

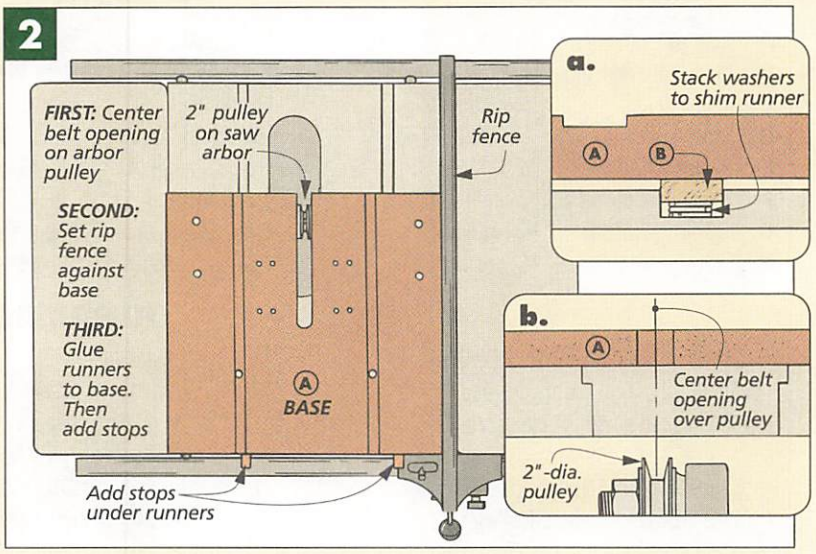

Arbor Assembly

Now it's time to work on the arbor assembly that's added to the top of the base, see drawing at left.

DIVIDING WALLS. The arbor assembly starts out as a couple ½"-thick hardwood **dividing walls (D)**, see Fig. 3. Once these pieces are cut to size and shape, clearance holes are drilled for the hubs on the large pulley. (Each side will require a different size hole.)

Note: To decide which diameter pulley you'll want to use with your saw, check the chart on page 35.

CLEATS. Next, to attach the dividing walls to the base, I added a small **cleat (E)** to each, see Fig. 3. But before gluing the cleats in place, I drilled countersunk shank holes for screwing the cleat (and dividing wall) to the base, see Figs. 3a and 4a.

When attaching the dividing walls to the base, the pulley and drive shaft will need to be sandwiched between the walls, see Figs. 4 and 4a. And if you're not using a link belt (see margin photo), you'll also have to add the V-belt at this time.

MANDREL SUPPORTS. Two pillow blocks support the mandrel shaft, and these require wood supports to lift them to the proper height, see Fig. 5. I cut the **mandrel blocks (F)** to size. Then I spot glued and screwed them to the base. (The shank holes have already been drilled, but you'll need to drill pilot holes for the 2½"-long screws.)

With the mandrel blocks in place, slide the pillow blocks onto the shaft and then secure them to the mandrel blocks with lag screws, see Fig. 5.

Now the grinding wheels can be added to the shaft. To position the wheels over the grooves in the base, I used a couple ⅜"-wide nylon spacers, see Fig. 5a.

PANEL & LID. At this point, the grinder part of this jig is functional. But before adding the carriage and tool rest, I decided to cover the exposed pulley and belt. So the last two items to add to the arbor assembly are a **pulley panel (G)** and **lid (H)**, see Fig. 5.

These pieces are cut to fit over the front two edges of the dividing walls, and the edges where they meet are beveled at 22½°. The exposed edge of the lid (G) is cut at 45°.

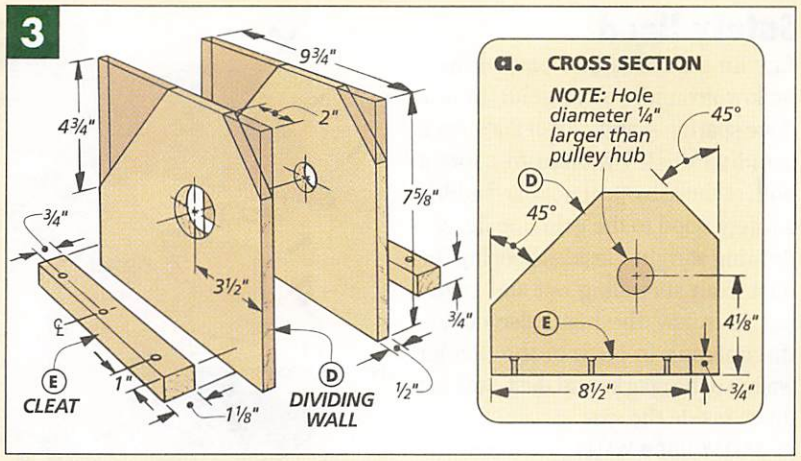

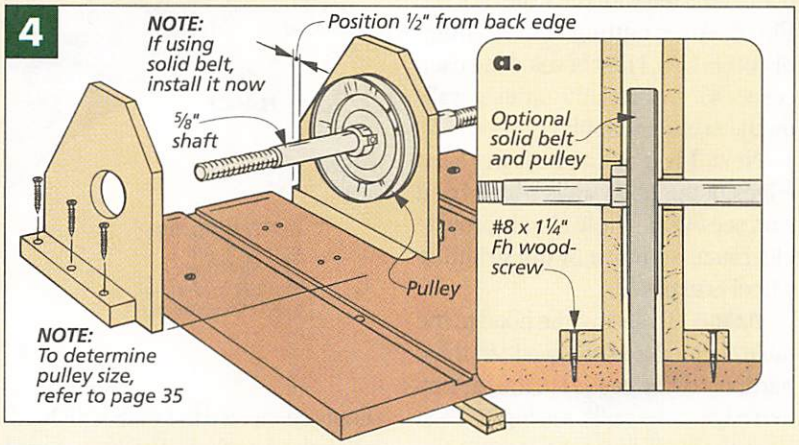

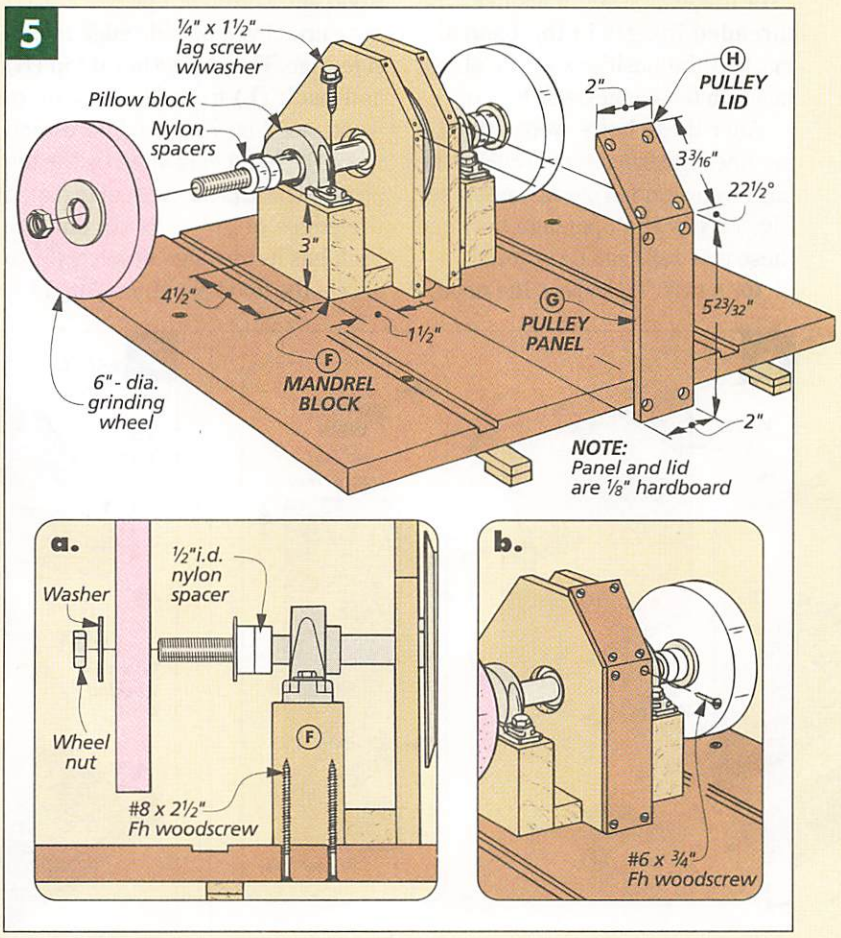

▲ *This belt is made up of removable links, so you can easily adjust it to the size you need.*

Safety Hood

Any time a chisel or a plane iron is hollow ground, you're going to produce sparks — and a lot of fine, black grinding dust. I wanted to contain both of these by-products, so I added a safety hood to the grinding jig, see drawing at right. Besides keeping the dust from spreading out and covering your saw, the hood also covers the opening in back of the divider walls, so the sparks and dust can't get down inside the saw.

SAFETY HOOD WALLS. To make the hood, I started with the **walls (I)**, see Fig. 6. After cutting the 1/2"-thick blanks to size, I first beveled the back corner 45° to match the dividing walls on the arbor assembly.

Next, I laid out and cut the front edges of the hood walls with a band saw, see Fig. 6. These simply provide clearance so more of the grinding wheel is exposed.

FLANGES. To secure the hood to the table, I glued and screwed 1/4"-thick hardboard **flanges (J)** to the the bottom edge of the walls, see Fig. 6. Then I set the wall assemblies over the threaded inserts in the base and marked the positions of the shank holes on the flanges, see Fig 6a.

After these holes were drilled, I mounted the flanges and walls to the base with studded plastic knobs, see Fig. 7. Now the openings between these two walls can be covered.

TOP & BACK. To enclose the hood, I simply connected the walls with hardwood and hardboard pieces. First, I measured from outside edge to outside edge. Then I cut a **hood top (K)** and **back (L)** from 1/2"-thick hardwood, see Fig. 7. (I used hardwood since the hood gets lifted by the top piece.) These pieces are cut to match the edges of the walls (I), and the back has its top edge beveled 45° to accept the hood panel, see Fig. 7a.

Also, I relieved the sharp edges of the top piece, see Fig. 7a. Then I glued and screwed the top and back pieces to the walls of the hood.

PANEL. Finally, the **hood panel (M)** can be added between the top and back. This piece is 1/4" hardboard and has both edges beveled 45°. This way, when the panel is glued and screwed in place, it fits tight against the top and flush with the back, see Fig. 7a.

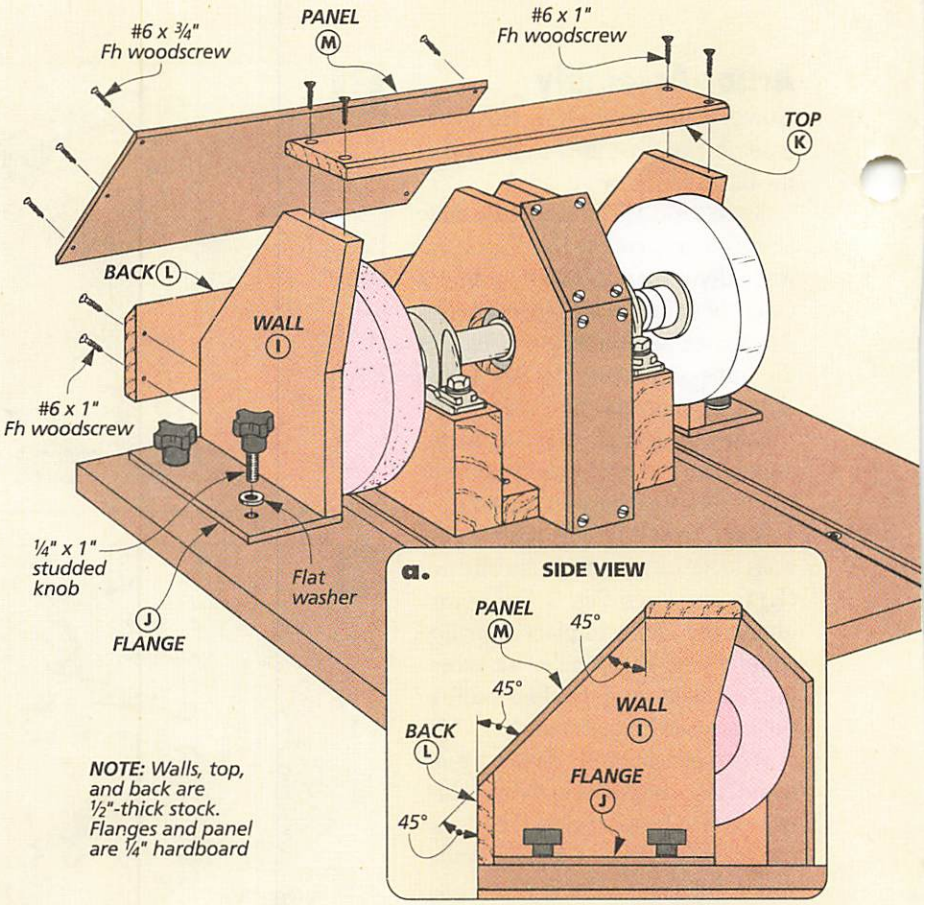

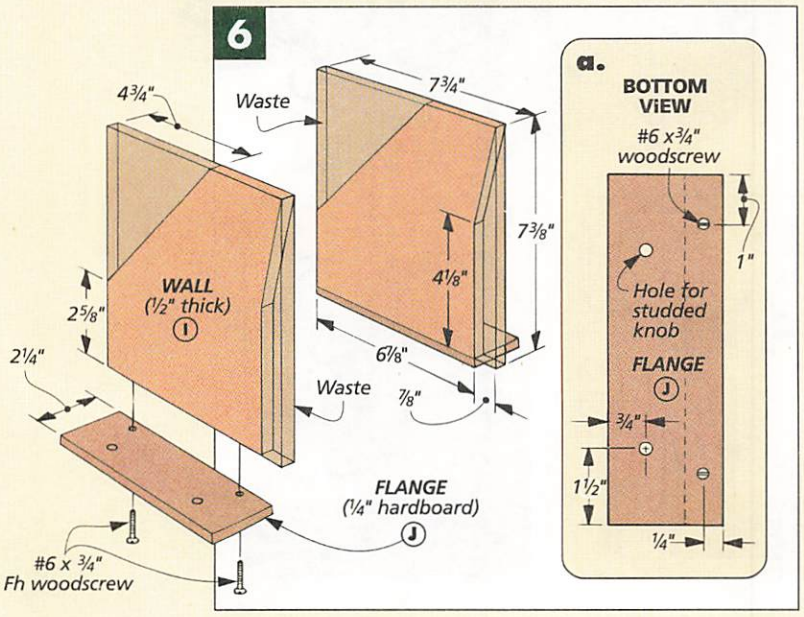

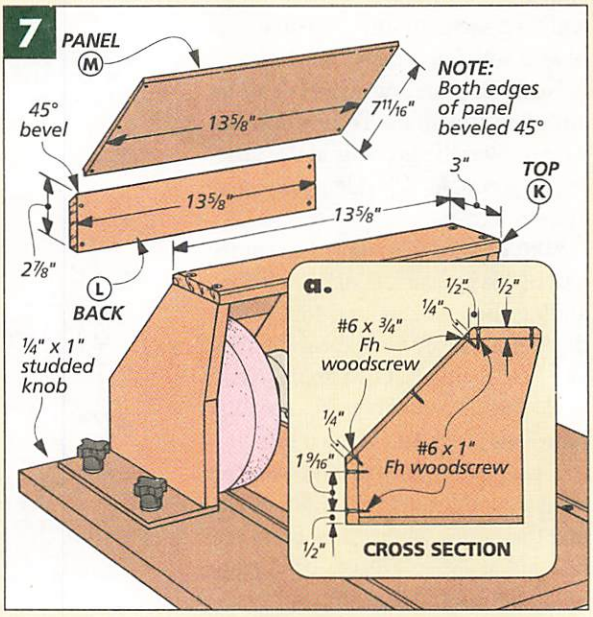

Carriage

With the grinding part of the jig complete, I began work on the carriage, see drawing at right. This part of the jig does three things. First, it positions the blade forward or backward on the base. It also allows the tool to tip into and away from the grinding wheel. And finally, it guides the blade side-to-side across the wheel.

BASE. To build the carriage, I started with the **carriage base (N)**, which is simply a 1/2"-thick hardwood blank (4" x 6 1/2"), see drawing. The first thing to do to this blank is cut a centered, 1/4"-deep dado that's 3/4" wide.

RUNNER. With this dado cut, next I made a 3/8"-thick **runner (O)** and glued it in the dado. Then a 1/4"-wide slot can be cut in both the base and runner, see Figs. 8 and 8a. This allows you to adjust the position of the carriage when you secure it to the base of the grinder, see drawing at right.

SIDES. Now, I cut two 1/2"-thick **sides (P)** that will be added to the base. After these pieces are cut to size (2" x 4 1/4"), I rounded over the top corners, see detail 'b' at right. Then I drilled countersunk shank holes for the screws that attach the sides to the base, see details 'a' and 'b' at right.

To hold a tilting guide bar between the sides, I used #14 woodscrews, see details 'a'. Since these screws act as pivot pins for the guide bar, they need to be line up with each other. One way to do this is to tape the sides together while drilling the countersunk shank holes. Then with the holes drilled, separate the sides and glue and screw them to the base, see details 'a' and 'b'.

GUIDE. Next, I added the **guide bar (Q)** that supports the tool rest, see drawing and detail 'b' above. This is simply a 1/2"-thick blank (2 1/2" x 6 3/8") that has the top edges chamfered to reduce friction and prevent binding.

After drilling pilot holes in the ends of the guide, it can be screwed between the two sides. Note: To get the guide centered, you may have to back one screw off and tighten the other until you have it just right.

ADJUSTMENT BLOCK. The last piece to screw to the carriage is a **micro-adjust block (R)**, see drawing and Fig. 9. This 1/2"-thick block has a 10-32 threaded insert that holds a machine screw. This screw acts as a stop for the tool rest guide. And a knurled knob makes it easy to turn the machine bolt.

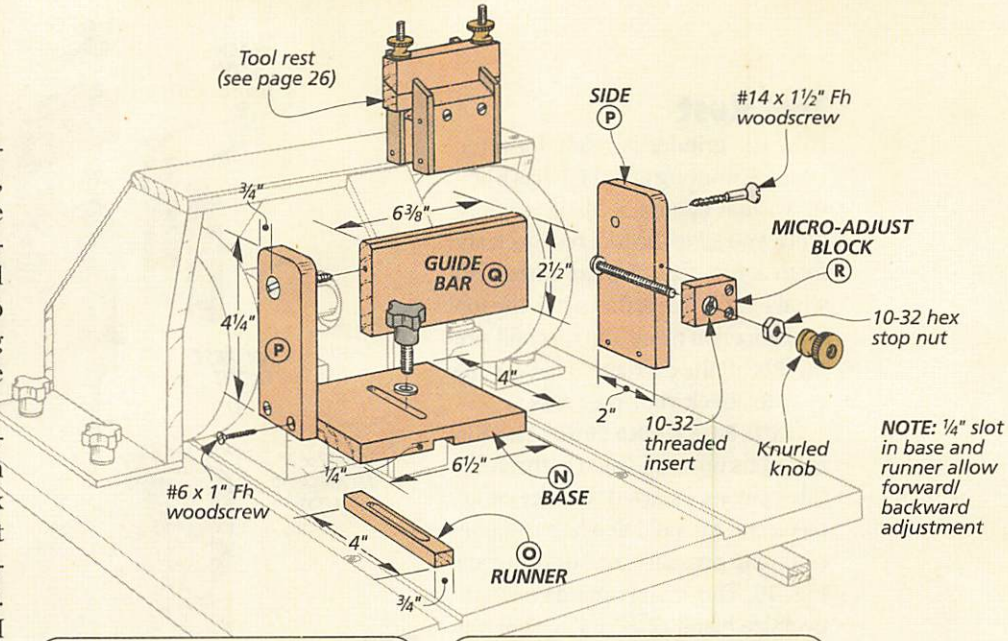

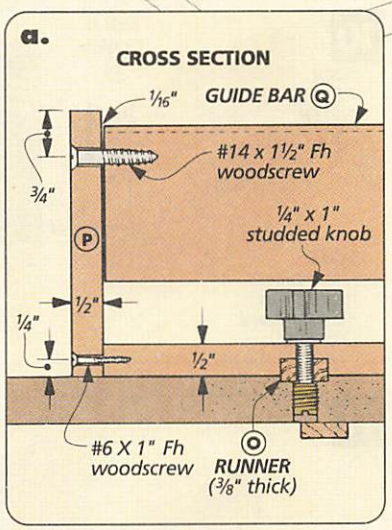

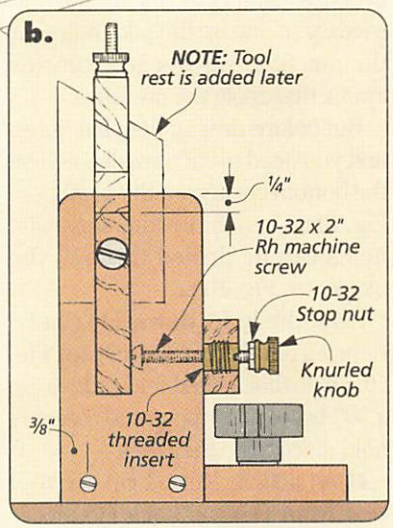

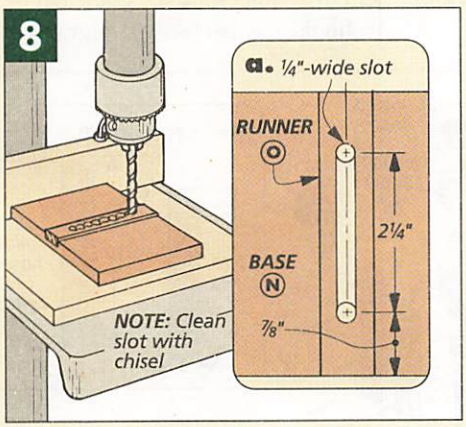

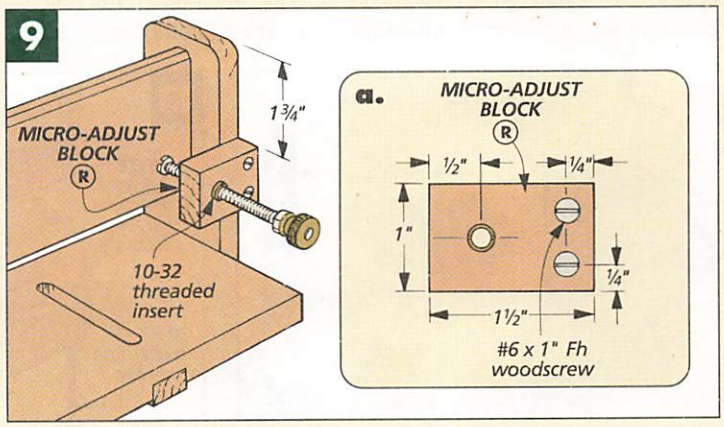

Tool Rest

Now the grinder is ready for a tool rest, see drawing at right. It has a hold down that clamps a blade securely while you slide the tool rest back and forth across the grinding wheel. But what I really like is that when the tool is clamped in place, the rest still simply lifts off the carriage. This way, it's easy to check your progress.

CENTER PIECE & HOLD DOWN. The tool rest ends up a sandwich of three ½"-thick pieces. I started with the center piece and the hold down that applies clamping pressure, see drawing and Fig. 10. These start out as a single, oversize blank (2½" x 4"). This way, it's easy to line up the pilot holes for the machine screws and knurled knobs that apply the pressure.

But before drilling the pilot holes, first you need to cut a small notch on the bottom corners of the blank, see Fig. 10a. Then the countersunk pilot holes can be drilled through the blank, see Fig. 10b.

Now, the **hold down (T)** can be ripped from the **center (S)**, see Fig. 10. To do this, I tilted the blade to cut a 30° bevel and ripped the ⅞"-wide hold down from the blank.

FRONT & BACK. Next, I cut the **tool rest front (U)** and **back (V)** pieces to size, see Fig. 11. These pieces are taller (wider) than the center piece so the tool rest will fit over the guide bar (Q) on the carriage. After the three pieces are glued and screwed together, bevel the top edge 30° just like the hold down, see Fig. 12.

FRONT & BACK STOPS. At this point, I added ¼"-thick hardboard **front (W)** and **back stops (X)** to both sides of the tool rest, see Fig. 13 and drawing above. These pieces also have a 30° bevel on top, and they're glued and nailed to the front and back pieces.

To attach the hold down, I epoxied the flathead machine screws into the pilot holes. Then the hold down and knurled knobs can be added.

If you find your tool rest doesn't slide smoothly across the guide bar (Q), a little sanding will solve the problem. Just don't sand the guide bar — it should stay perfectly straight.

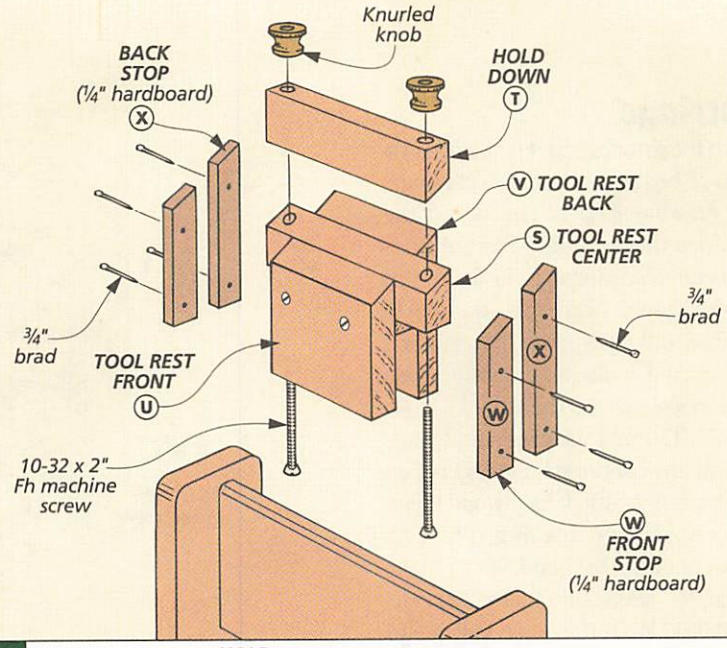

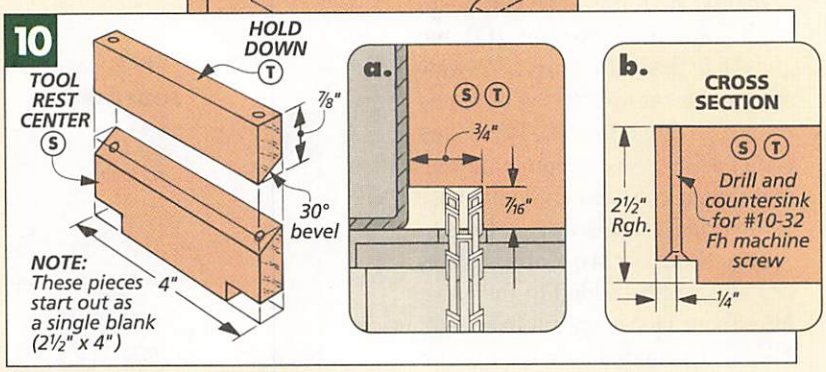

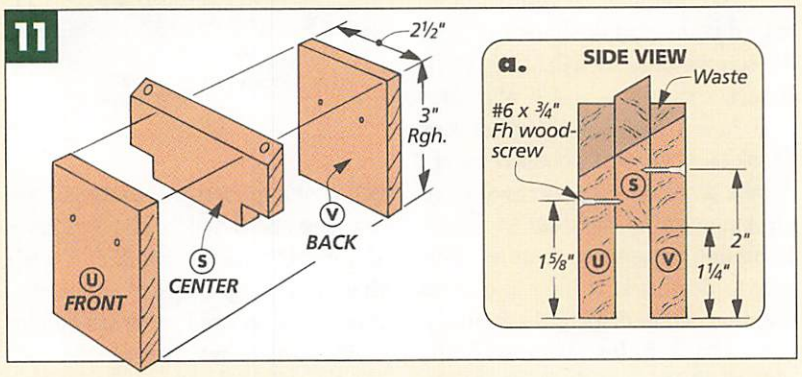

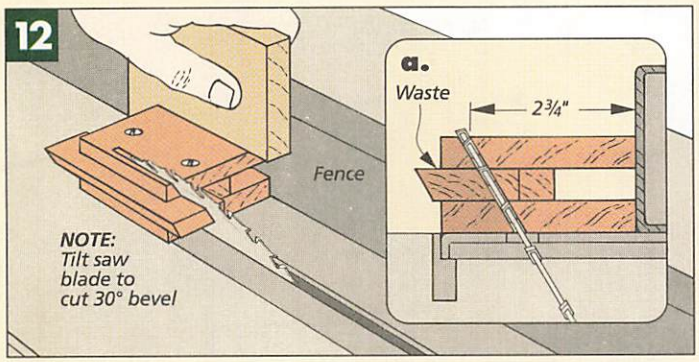

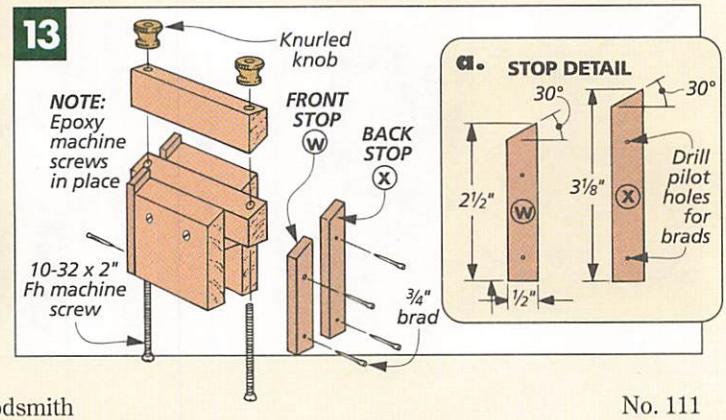

Setting Up the Jig

Now the jig is complete, and it can be set up on the table saw. This will take a few minutes the first time, but after that, it shouldn't take much longer than it does to change a saw blade.

The first thing to do is remove the rip fence, insert plate, and saw blade. Then the hub-less pulley can be added to the saw's arbor, see detail 'a'. (The pulley's outside diameter is 2". And the bore should match the diameter of the arbor.) Note: Remove the pulley's set screw before installing it. (The pulley is held in place with the arbor nut.)

Next, I raised the arbor up to get the belt around the pulley. Then set the jig in place and slip the belt over the pulley. Now lower the arbor until the belt is tight, see detail 'b'.

With the jig in place, you're ready to start sharpening. But before you adjust the carriage and tool rest (see box below), place the safety hood over the inserts and tighten it down. W

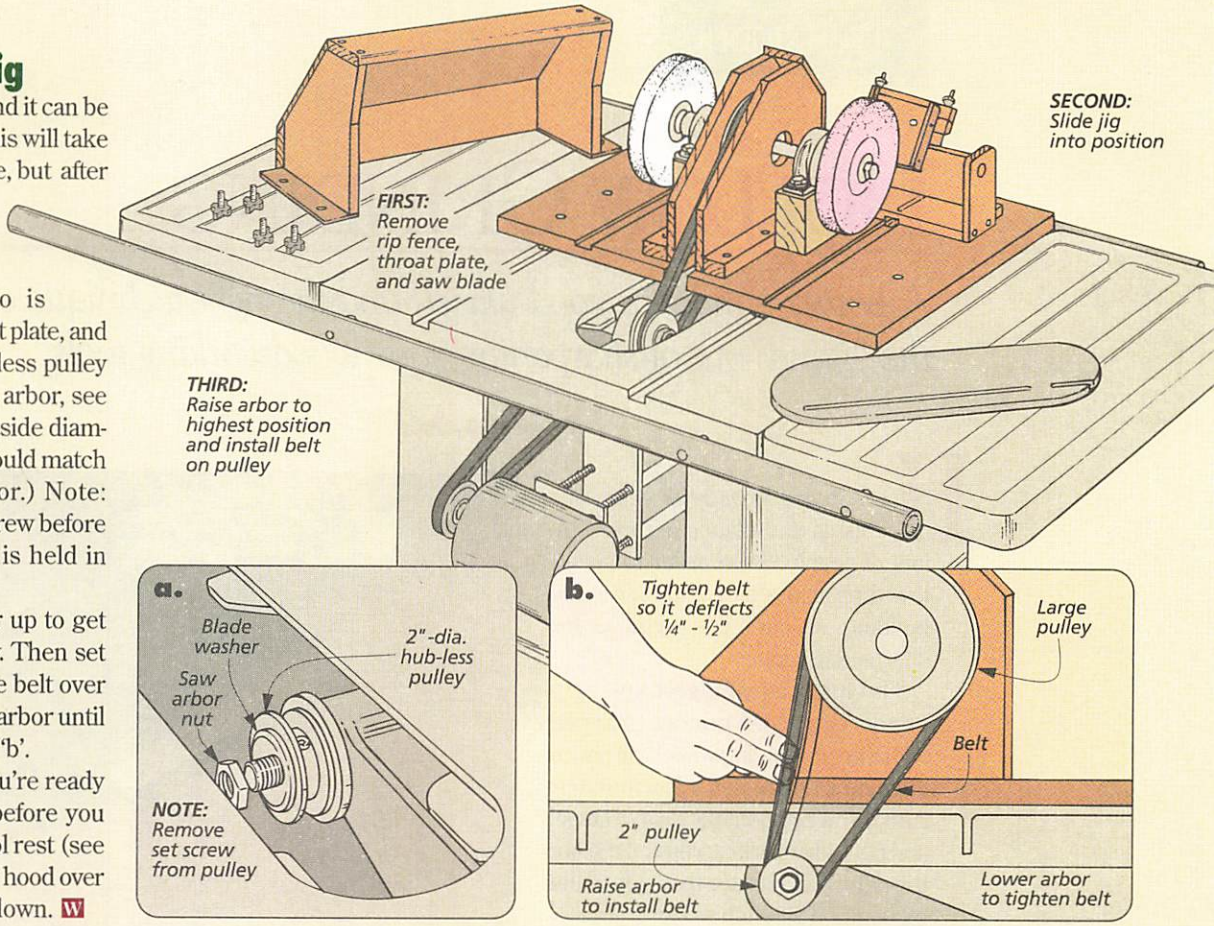

ADJUSTING THE JIG

Placing the chisel or plane iron in the jig and getting it adjusted is a simple three-step process, see photos below.

After the carriage is set in the groove in the base, the first thing to do is secure the blade in the tool rest, see Step 1 below. With the blade projecting out a few inches, I push the tool against the stops on one side of the tool rest. Then I tighten the knurled nuts on the hold down.

Now the position of the blade can be fine-tuned. But this time, I move the carriage slightly until the blade touches the wheel at the center of the bevel, see Step 2. Then I "lock" the carriage down.

Keep in mind that by following this procedure, you're simply copying the angle of the bevel that's already on the blade. In most cases, this isn't a problem — most blades are "factory ground" to the right angle anyway (about 25°). But if you want to change the angle of the bevel, then cut this angle on a small scrap and use it to set the position of the carriage and holder.

With the carriage tightened down, next I set the micro-adjust screw, see Step 3. I adjust the screw so it allows the blade to just touch the wheel. Then tip the chisel back, turn the power on, and gently feed the blade into the wheel. And when grinding, I found it works best to focus on smoothly sliding the tool rest side-to-side.

One more thing. You'll probably need to reposition the blade after you've begun to grind the bevel. But I'll mention more about that later, see page 30.

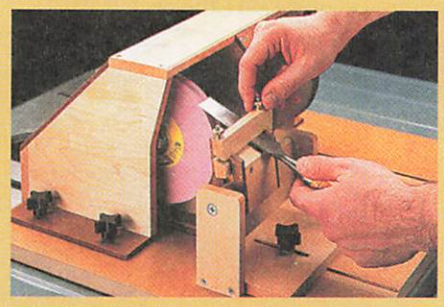

1 *First, slide the tool under the hold down so it protrudes a few inches and is butted against one of the stops. Then tighten down the knurled knobs on top.*

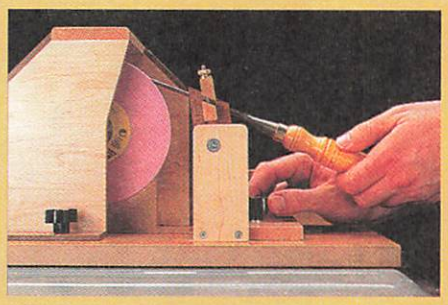

2 *Next, to fine-tune the position of the tool, slide the carriage in or out until the blade is touching the grinding wheel right at the center of its bevel.*

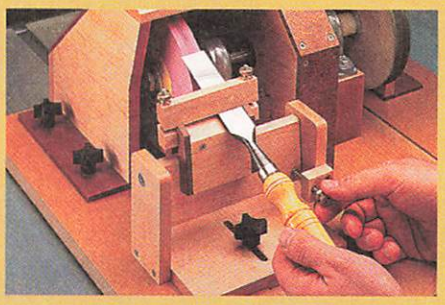

3 *Finally, to set the depth of the grind, turn the micro-adjust screw until it just touches the guide bar on the carriage. Now you're ready to test the setup.*

HOLLOW GRINDING

A power grinder, a good wheel, and the right technique can take the "grind" out of sharpening your woodworking tools.

Here in the *Woodsmith* shop, our chisels and planes get used by lots of people. So in order to spend less time sharpening and more time building, we often use a grinder for sharpening tools.

The main advantage to using a grinder is speed. A grinder equipped with a good grinding wheel will put an edge on a tool in just a few minutes. And if you accidentally drop a chisel and put a big nick in it, you can restore the edge much faster than you could by hand on a bench stone.

HOLLOW GRINDING. But there's another advantage to using a grinder. Unlike a flat sharpening stone, a grinding wheel produces a bevel with a slightly concave surface, see Fig. 1 and drawing below. This is known as a hollow ground bevel.

The nice thing about a hollow ground bevel is it cuts down considerably on the time you'll spend honing. (Honing is the process of putting the final, razor-sharp edge on a tool.) Since the surface of the bevel is concave instead of flat, you only have to hone the edge of the blade, not the entire bevel. All it takes is a few strokes on a flat sharpening stone.

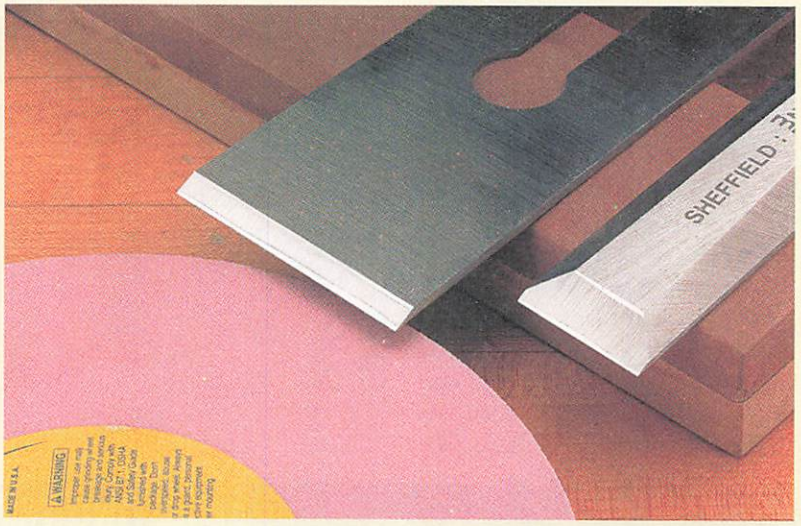

Ironically, the speediness of a grinder can also be its biggest drawback. If you're not careful, the heat generated by the rapidly spinning wheel can burn the edge of the tool and ruin the temper (hardness) of the steel. You can avoid this by using a low-speed grinder or by occasionally dipping the end of the tool in a cup of cool water while grinding.

It's also important to remember that grinding is only one step of the sharpening process. So while a grinder is great for quickly shaping the bevel of a tool, there are other steps involved in getting a razor-sharp edge. And the first step is flattening the back of the tool.

FLATTENING THE BACK. When it comes to sharpening, most people only think about the bevel of a tool. But the back of the tool is just as important. If the back isn't flat across the width of the tool, the edge will end up concave or convex when you grind the bevel, see Figs. 2a and 2b. So before working on the bevel of a tool, I take the time to make sure the back is flat.

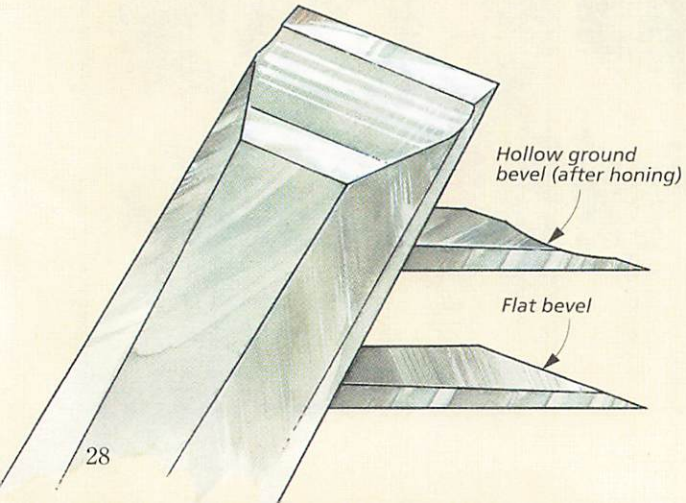

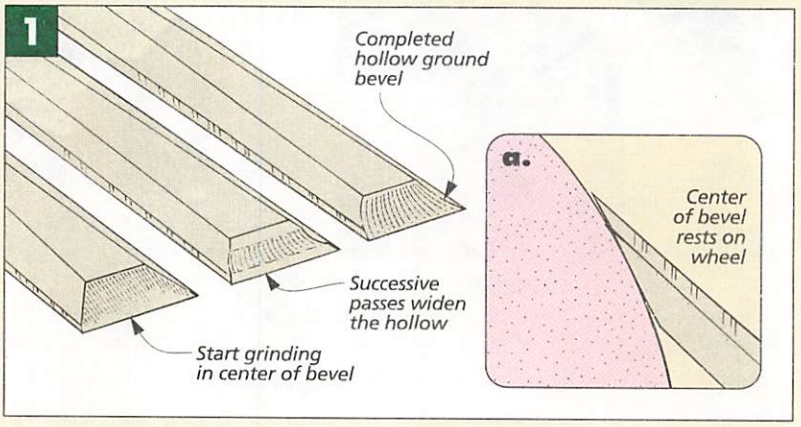

Fortunately, flattening the back of most tools doesn't take too long. And usually, it only has to be done once for the life of the tool.

I like to flatten the backs of my tools on waterstones. Start by rubbing the back of the tool back and forth across a medium (1000) grit stone, see Fig. 2. Press down on the tool firmly to prevent it from rocking on the surface of the stone.

Once the surface of the back is a uniform dull gray, switch to a fine (6000) grit waterstone. This stone will leave a mirror-like finish on the back, see photo in margin.

When the back of the tool is flat, you're ready to begin shaping the bevel of the tool on the grinder. But before you start grinding away, there are a couple steps of preparation.

DRESSING THE WHEEL. In order to get good results when grinding tools, you need to start with a good quality grinding wheel, see box below.

But just as important as the quality of the grinding wheel is its condition. A wheel that is glazed or has a deeply grooved and pitted face won't do an acceptable job. So to keep my grinding wheels in top shape, I use a silicon carbide dressing stick, see Fig. 3 and photo in box below.

The dressing stick removes the glazed surface, exposing the fresh abrasive particles beneath. But I also use the dressing stick for another purpose. I like to dress the wheel so that it has a slight crown in the middle, see Fig 3a. I find that crowning the wheel actually makes it easier to grind a straight, even bevel. But I'll talk more on this subject later.

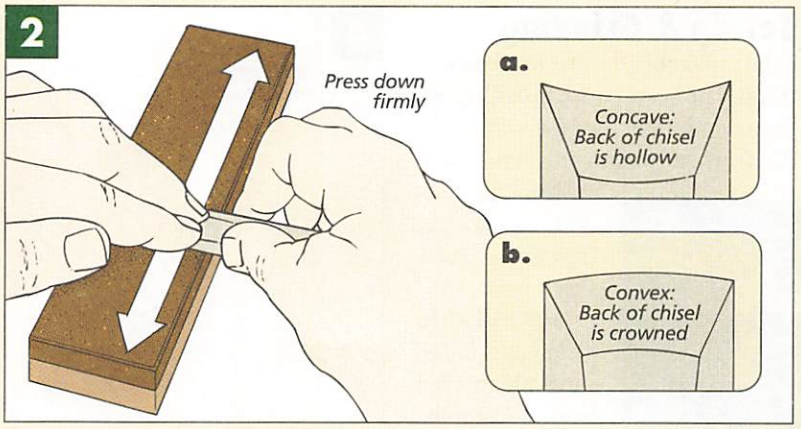

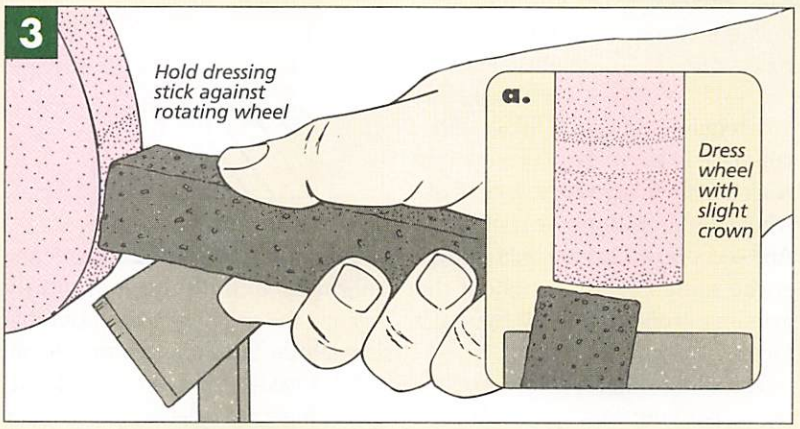

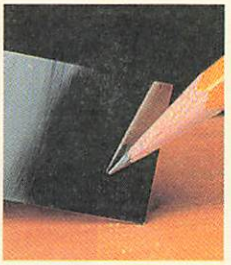

▲ *A fine-grit stone produces a mirror-like finish.*

BEVEL ANGLE. Once the grinding wheel is taken care of, the next step is to set the tool rest at the proper grinding angle. The grinding angle plays an important role in how well a tool cuts. If the angle is too small, the cutting edge will be thin and weak. If the angle is too large, the tool will require more force to cut through the wood.

The bevel on most new tools is ground at a 25° angle, which generally works well for most of the work I do. To maintain this bevel angle, just set up your jig or tool rest so that the very center of the bevel sits on the grinding wheel, see Fig. 1a. Shop Note: If you have a tool that has been ground at an odd angle, you might want to compare the bevel to one that you know is correct when setting up the grinding angle.

GRINDING WHEELS

Most grinders come with carborundum wheels that are too hard and coarse for grinding woodworking tools. They tend to clog up with metal quickly, and this in turn leads to friction (and overheating).

In the *Woodsmith* shop, we use aluminum oxide wheels. The abrasive particles on this type of wheel fracture and break away as you sharpen. So fresh abrasive particles are exposed on the surface of the grinding wheel.

For a long time, we used a white, 60-grit aluminum oxide wheel. But recently we tried out a 120-grit wheel. Aside from the difference in color (it's pink), this wheel leaves a much smoother edge.

And much to my surprise, the finer grit wheel cuts with almost the same speed as the 60-grit wheel.

But I still keep both wheels in the shop. Now I use the fine grit wheel for most of my routine sharpening and the medium grit wheel when I have a lot of material to remove (like sharpening an old plane iron that is badly nicked or chipped).

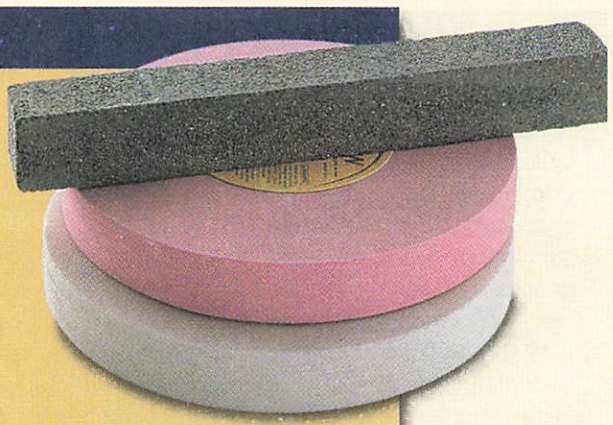

Set Up & Grinding

I still remember the first tool I tried to grind. The bevel ended up with more facets on it than the Hope diamond. That's when I discovered there's more to grinding than just holding a tool up against a rotating wheel.

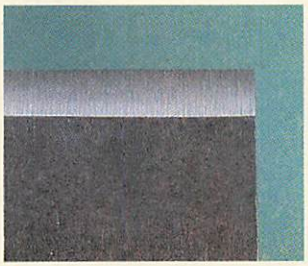

▲ *Hollow-grinding produces an even, concave bevel.*

The goal when grinding is to end up with an even hollow along the entire length of the bevel, see photo at left.

Achieving this goal requires a couple of things. First, you have to move the tool smoothly back and forth across the face of the wheel without tilting or rocking it. And second, you have to hold the tool at the same angle throughout the grinding process, without tipping it forward or back.

The whole thing is kind of like trying to pat your head and rub your stomach at the same. The point I'm trying to make is that it's difficult to get good results unless you use some sort of jig to help guide the tool.

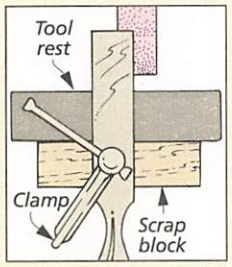

▲ *A stop block clamped to the tool rides against the tool rest.*

The low-speed grinder (see page 20) takes care of this problem. But if you're using a regular bench grinder, try clamping a stop block to your tool to ride against the edge of the tool rest, see drawing in margin. This will help you guide the tool back and forth as you're grinding.

But even with a jig, grinding takes a little practice. Your first tendency might be to hold the tool tightly against the grinding wheel. But this is really the last thing you want to do.

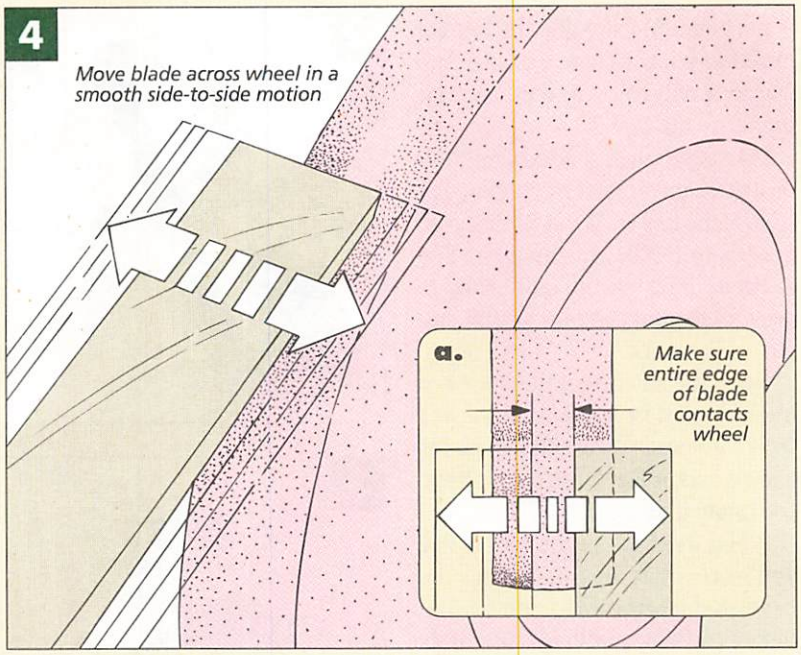

LIGHT PASSES. Instead, take light, sweeping passes, letting the grinder do the work. Concentrate on maintaining a smooth side-to-side motion, see Fig. 4. You might want to try locking your wrists in place to avoid rocking the tool at the end of each pass.

You'll want to focus your attention on the crowned spot in the middle of the wheel — this is where the grinding is taking place, see Fig. 4a. Keep the tool moving back and forth over this spot, making sure to grind the entire edge of the tool with each pass.

Check your progress frequently by examining the bevel of the tool. You should see a straight hollow forming across the face of the tool. If this isn't the case, you may have to make some adjustments, see box below.

If you need to grind a little deeper, *don't* push down on the tool. Instead, back off the micro-adjust screw slightly (or reposition the stop block clamped to your tool).

It's also a good idea to periodically check to make sure the blade isn't overheating. If it's uncomfortably warm to touch, stop and let it cool off before resuming grinding.

Once you have an even hollow that extends to the edge and all along the width of the blade (see Fig. 1 on page 28), you're ready for the next step.

TROUBLESHOOTING

No matter how carefully you build and set up the low speed grinder, you may still find it necessary to make some adjustments once you start grinding. But don't worry. This is a simple enough matter.

ANGLED EDGE. If the edge of the blade is straight but not square to the sides, just cock the tool slightly in the tool holder so the high end faces into the wheel, see drawing.

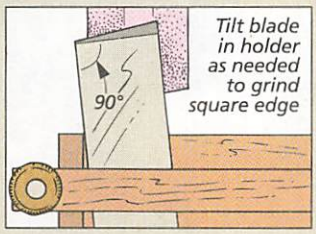

Now just grind away a little more material to see if you need to make further adjustments. Once you're satisfied the wheel is grinding squarely, finish grinding the edge.

CURVED EDGE. If you find that the grinder is rounding your tool and creating a convex edge, you'll need to grind the edge down until it's straight.

To do this, draw a reference line across the back of the tool using a square and a pencil. Now start grinding at the center of the blade, using short side-to-side passes to take down the high spot of the blade, see drawing.

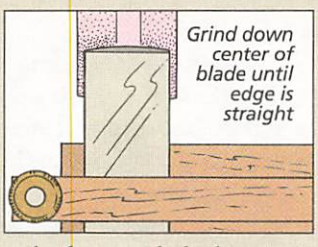

As the rounded edge starts to flatten out, take longer and longer passes across the stone until you end up with an edge that is both straight and even all the way across.

Honing The Edge

Grinding is only half of the sharpening process. For a razor-sharp edge, the bevel needs to be honed.

Honing is the process of removing the scratches left behind by the grinding wheel. This is done by rubbing the tool across a flat sharpening stone.

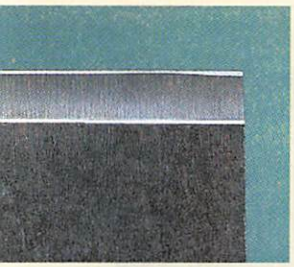

▲ *Honing creates a razor-sharp edge.*

To hone my tools, I usually use a combination 1000/6000 grit waterstone. But an oilstone (like an India stone or a hard Arkansas stone) will also work. And although I find it faster to hone my tools freehand, there are a number of commercially available honing guides on the market, see photo in margin at right.

To hone the edge, start with the medium (1000) grit stone. Simply place the tool down on the stone so that both the heel and the toe of the bevel are resting flat, see Fig. 5a

Now just pull the tool slowly across the surface of the stone a few times, see Fig. 5. Don't push the tool forward — it's apt to bite into the stone and gouge the edge you worked so hard to achieve. Instead, lift the tool completely off the stone during each return stroke.

Hone the tool on the 1000 grit stone until you have a narrow flat along the top and bottom edges of the bevel.

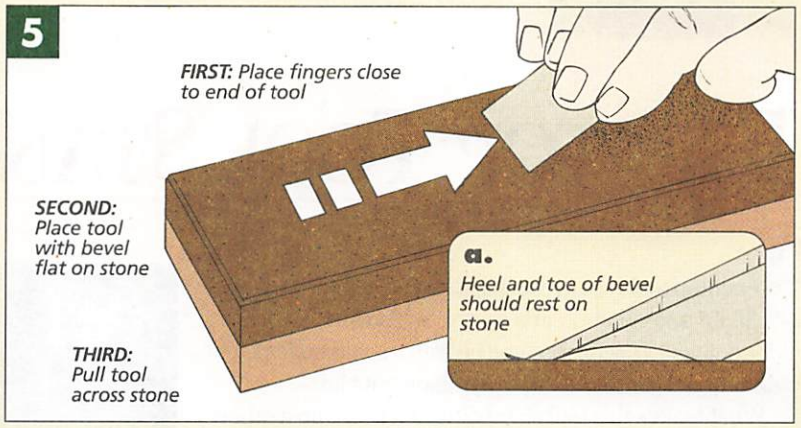

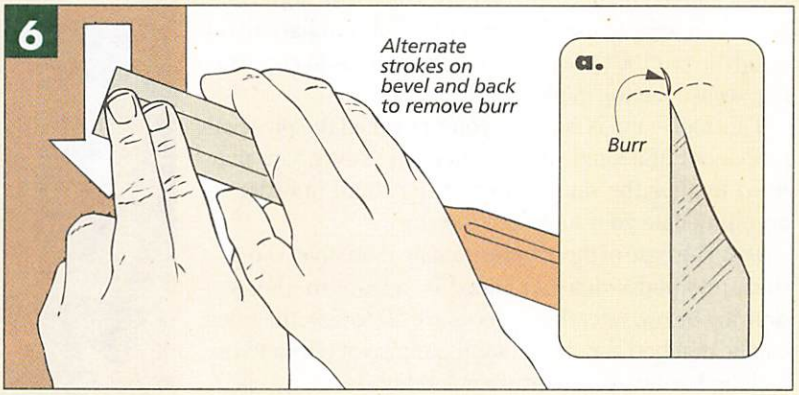

Then switch to a fine (6000) grit stone. A few strokes on this stone will create a mirror-like polish on the sharpened edge, see margin photo at left.

REMOVING THE BURR. The grinding and honing process creates a sharp "burr", or a small hook, on the back of the cutting edge. (You can usually feel this burr by rubbing your finger over the back of the tool.)

To remove this burr, simply take a few alternating strokes on the bevel and back of the tool on the fine grit waterstone, see Fig. 6. This will break off the burr by bending it back and forth, see Fig. 6a.

WHEN TO GRIND. One final note. It's not necessary to re-grind the bevel every time you sharpen a tool. A quick honing is usually enough to restore a razor-like edge to a dull tool.

But after repeated honings, the hollow ground bevel will start to get worn away. When only about 1/3 of the original hollow remains, it's time to re-grind the bevel. W

▲ *A honing jig holds the blade at a consistent angle to the stone.*

BUFFING WHEEL

When it comes to honing tools with straight edges, a flat waterstone works just fine. But for tools like gouges or carving sweeps, I often use a buffing wheel.

I use a hard felt wheel and a honing compound for buffing, see page 35 for sources. The nice thing about this type of buffing wheel is that it has some "give." The felt is soft enough that it will conform to the curved edge of the tool, but not so soft that it rounds over the edge.

To use this method, simply charge the wheel with the compound by holding the stick against it while it's rotating. Then hold the tool against the wheel, see photo. Safety Note: When buffing, always hold the tool pointing down (in the direction of the wheel rotation).

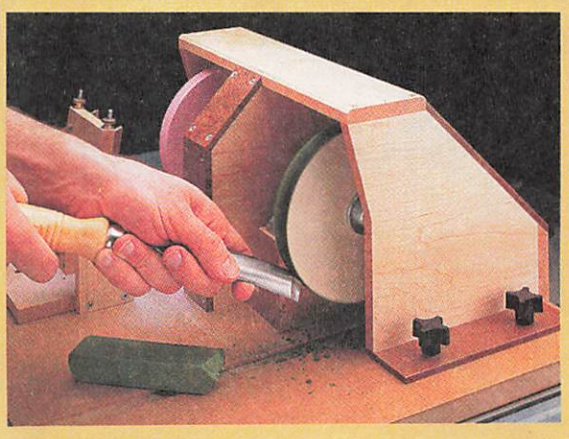

FLIP-TOP TOOL STAND

Benchtop tools are great space savers, but they can still fill up a small shop in a hurry. So **Arthur Muller** of Menomonie, Wisconsin came up with a solution. It's a tool stand that does double-duty by flipping its lid.

What makes this tool stand different from most others is that you can mount tools on both sides of the top. Then when you want to use a different tool, all you have to do is flip the top 180°, see photo. Locking knobs in each corner secure the top in place.

This tool stand is sized so you can cut all the plywood pieces out of a single 4' x 8' sheet. However, you may need to alter the dimensions of the stand in order to accommodate your tools, see Fig. 1.

BASE. The base of the stand is nothing more than two ¾"-thick plywood **sides (A)** joined by a **bottom (B)**, see drawing below. After these pieces are cut to size, the sides can be notched and drilled for the top pivot pins and the locking hardware, see drawing and Fig. 1a.

A dado cut on the inside face of each side piece holds the bottom in place. But before assembling these pieces, miters are cut on the corners of the side pieces and chamfers are routed on all the edges, as well as the front and back edge of the bottom, see Fig. 1b. Once this is done, the sides can be glued and screwed to the bottom.

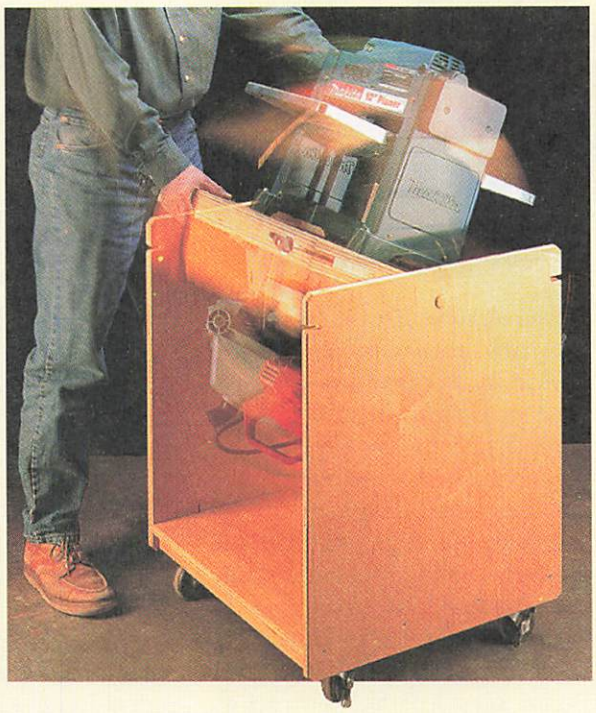

CLEATS & KICKBOARDS. In order to strengthen the bottom of the base and make it more rigid, cleat blocks and kickboards are added. The **cleat blocks (C)** are glued up from two pieces of ¾" plywood, see exploded view on next page. These are glued in place against the sides and bottom. Then plywood **kickboards (D)** are glued to the ends of the cleats at the front and back of the base.

To allow the tool stand to be moved around easily, a lock-

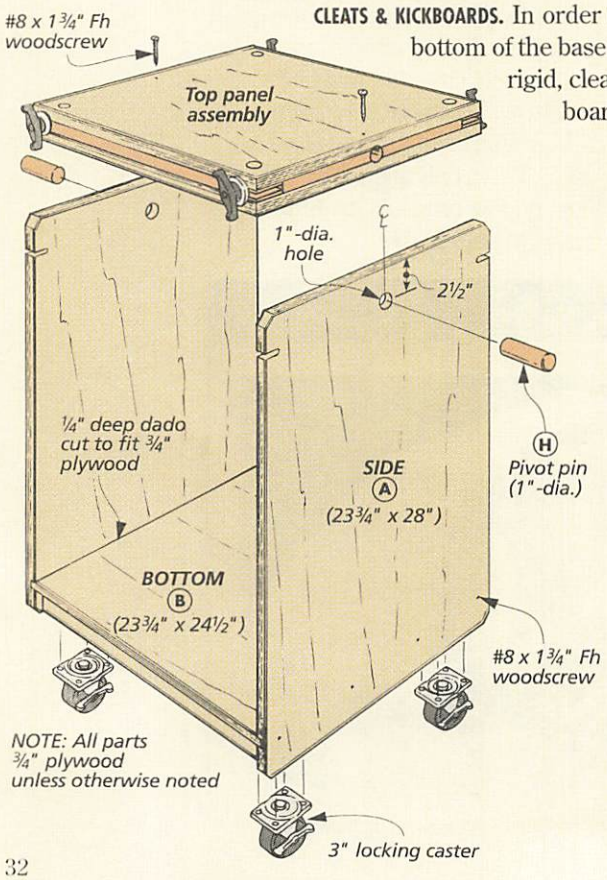

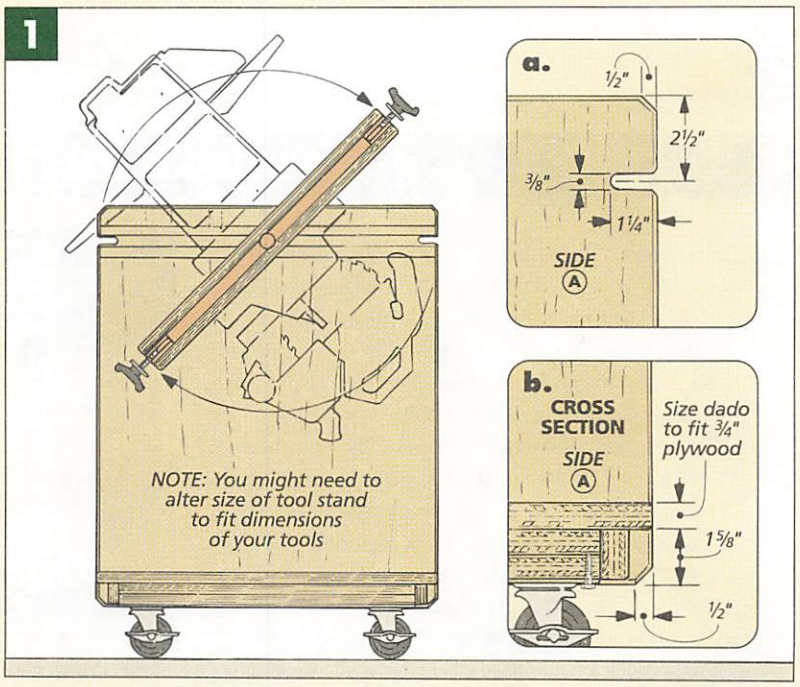

ing swivel caster is added to each corner (see page 35 for sources). These are attached to the cleat blocks with lag screws, see detail 'a'.

TOP. Once the base is finished, all that's left is to build the top. The top is made out of two plywood **top panels (E).** These plywood panels sandwich two hardwood **side spacers (F)** and **front** and **back spacers (G)**, see Fig. 1. This extra thickness helps prevent racking when the sides are drawn tight to the top by the corner locking knobs.

In addition to beefing up the top, the front and back spacers serve another purpose. Notches cut in the ends of these pieces house eyebolts that swing into the notches cut in the sides, locking the top in place, see Figs. 2 and 3. (Note: The eyebolts should fit smoothly in the notches without having to be forced in place.)

Once these notches are cut, the plywood top pieces and the spacers can be glued up. Then holes and counterbores for the locking hardware can be drilled, see Fig. 3.

LOCK-DOWNS. Except for the large plastic wing nuts, the corner lock-downs use common hardware. An eyebolt fits into the slot cut in each corner of the top and is held in place by a carriage bolt, washer, and nylon lock nut, see Fig. 3.

Then a large fender washer and plastic wing nut are placed over the threaded end of the eyebolt. The wing nuts are then tightened down against the sides of the base, locking the top in place, see top photo at right.

PIVOT PINS. The top is attached to the base with a pair of **pivot pins (H)** that pass through the sides of the base and into holes drilled in the edge of the top. To locate the pivot pin holes in the edge of the top, just place the top between the sides of the base and secure it in place with the locking hardware. Now using the hole in each side of the base as a guide, drill holes into the edge of the top, see Fig. 4.

The pins are nothing more than 1"-dia. hardwood dowels. After chamfering the ends, the pins can be slipped through the sides and into the top. Then each pin is secured by a single screw, see Fig. 4a.

Tools can be mounted to each side of the top with lag screws. To use the stand, just loosen the wing nuts in each corner, swing the eyebolts out of the notches in the sides, and carefully rotate the top. Then before using the tool, make sure to slide the eyebolts back in place and firmly tighten down the wing nuts. W

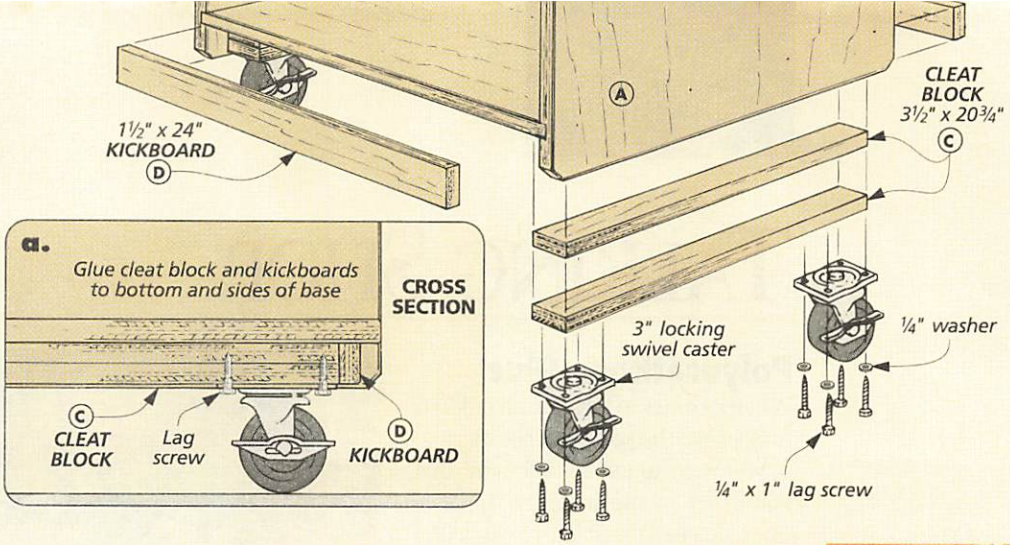

▲ *Tighten knobs in each corner to lock top firmly in place.*

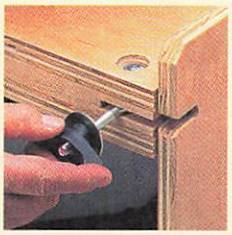

▲ *Loosen knobs and swing out eyebolts to flip top over.*

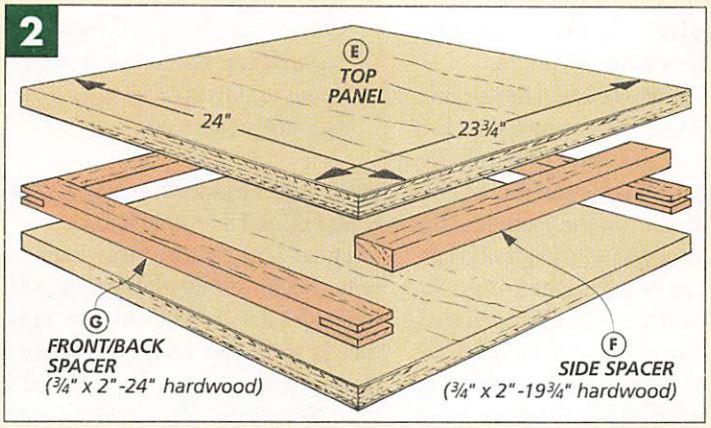

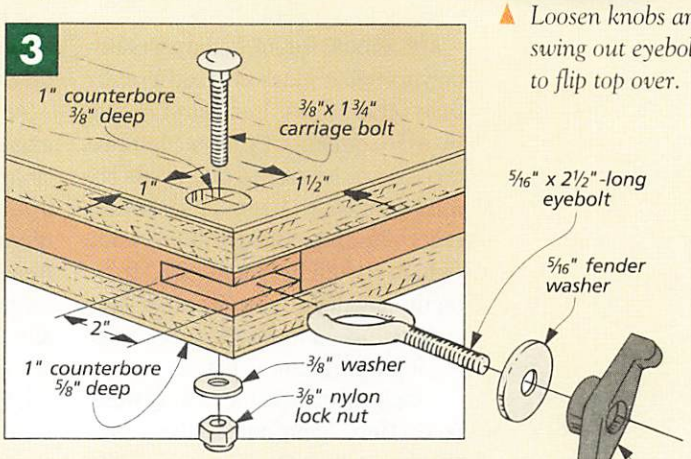

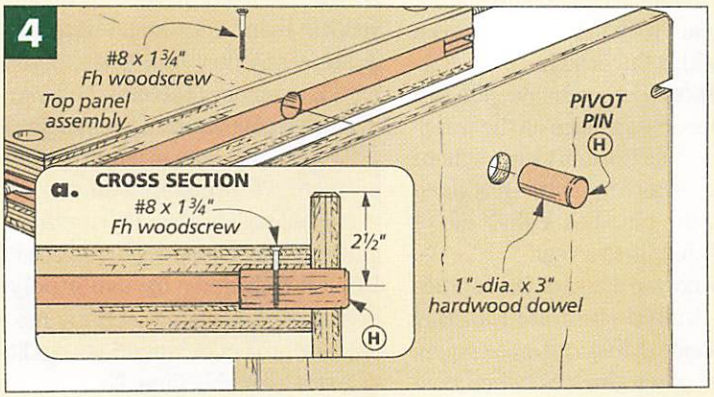

FEATURE YOUR JIG

If you've built an *original* jig and wish to see it featured on this page, send your idea to *Woodsmith*, Reader's Jig, 2200 Grand Avenue, Des Moines, IA 50312.

If we publish it, we'll send you $100 and a full set of *Woodsmith* back issues, with binders. Include a sketch (or photo) of your jig, explain how it's used, and include a daytime phone number.

TALKING SHOP

Polyurethane Glue

When it comes to building an outdoor project like the garden arbor on page 6, you want to use an adhesive that stands up to the weather. Here in Iowa, that can mean lots of rain in the spring, humid heat in the summer, and dry, frozen winters.

I've tried a number of different glues on outdoor projects in the past (plastic resin, resorcinal, and epoxy). But this time, I decided to use one that's relatively new: polyurethane glue. (For sources, see page 35.)

When you hear "polyurethane," you probably think of the popular finishes first. But polyurethane glue has little in common with these finishes. In fact, it doesn't even have much in common with other outdoor glues.

For one thing, the outdoor glues I'm used to working with are all two-part concoctions. But there's no mixing necessary with this glue, it's ready to go right out of the bottle.

APPLICATION. But more importantly, polyurethane glues cure differently than other glues. Instead of curing by evaporation or by a reaction that takes place when two chemicals are mixed together, these glues simply react with the moisture in the wood (which should be at least 8%). To be on the safe side, I usually add a little water to one of the workpieces, misting it on with a spray bottle.

I apply the glue to the mating workpiece. Here again, polyurethane glue requires a different approach. With other glues, you don't want to "starve" the joint (not apply enough glue). But polyurethane expands as it cures, and the tendency is to apply too much. In fact, figuring out how *little* glue to apply takes some getting used to. I found it easiest to spread the glue thin with a plastic spreader, see photo. This way, I was sure the wood was covered without too much excess.

WORKING TIME. With most other glues, things start to get a little frantic as I try to get the clamps in place before the glue sets up. That's another reason I like using this glue. There's no rush. You have 20-30 minutes to get the clamps in place and to make sure the assembly is square.

▲ *One unique characteristic of polyurethane glue is that it foams as it reacts with the moisture in the wood.*

Of course, the down side to this is you have to leave the clamps on a little longer. I typically like to keep them on anywhere from 4-6 hours.

As I mentioned earlier, these glues expand as they react to moisture. But "foam" may describe it better, see inset photo. When I saw this bubbly mess oozing from the joint line, my first reaction was to wipe it off right away — before it hardened. But actually, polyurethane glue is much easier to remove *after* it has dried. Unlike other glues, this glue will scrape or sand off easily. (I like to use a cabinet scraper.) That's because the glue doesn't cure rock hard. You can even dent it with a fingernail.

DRAWBACKS. Polyurethane glue definitely deserves a place on the woodworker's shelf. But don't leave it there too long. After the bottle has been opened, the glue has a shelf life of about 6 months to a year.

That's not too unusual. Other glues have a limited shelf life too. But polyurethane glue is a bit more expensive than other glues. So when buying some for a project, I try to get just what I think I'll be able to use.

There's one more drawback to note. Because this glue reacts with moisture, it will react with the moisture in your skin, so it's a good idea to wear gloves when applying the glue, see photo. And even though polyurethanes have little or no solvents in them, you should have adequate ventilation, too. (Also, if you have respiratory problems, be aware that these glues contain isocyanates.)

So what's the bottom line? For most projects, I'll probably still rely on trusty old yellow glue. Polyurethane glue is a little too pricey to replace it. But I'll definitely be using polyurethane glue again — on my next outdoor project or when I need a little extra assembly time. W

SOURCES

Woodsmith Project Supplies offers hardware kits and supplies for some of the projects shown in this issue. Supplies for these projects are also available at your local hardware store or through the mail order sources at right.

GARDEN ARBOR

To build the arbor on page 6, I had no problem finding the exterior grade hardware at my local hardware store (for a complete hardware list, see page 13). However, for the Sonotubes (tubular paper concrete forms) and concrete anchors, you'll probably have to go to a home or building center.

The other thing you need is a glue that's going to hold together when it gets wet (and hot and cold). There are a couple options you should be able to find locally. Resorcinol and plastic resin are fairly common.

POLYURETHANE GLUE. But for this arbor, I tried polyurethane glue. There are now quite a few manufacturers of this glue, and larger hardware stores and building centers might be carrying it. But your best bet is a woodworking store or one of the mail order sources listed at right.

LOW-SPEED GRINDER

Building the low-speed grinder requires quite a bit of hardware (for a complete list, see page 21). Besides the usual variety of hardware, you're also going to need an arbor assembly, a grinding wheel (or two), two pulleys, and a belt.

The arbor assembly is available locally or through the sources at right. But wherever you get it, make sure it uses ball bearings (and not bronze bearings).

There are a number of grinding (and buffing) wheels available. These and other sharpening supplies can be found locally or through the mail order sources listed at right.

PULLEYS. For the pulleys, you need to make sure you order the right size. The first is a 2" outside diameter, hub-less pulley. The important thing here is that its inside bore matches the diameter of the arbor on your saw. (Mine was 5/8".)

The size of the larger pulley depends on the speed of your table saw's *arbor*. Most arbors fall between 3000 and 4500 rpm, so we've included a chart with the appropriate pulley size, see box below.

BELT. As for the belt, we used a length of Power-Twist link belt. These cost more than solid belts, but they're adjustable and also reduce vibration.

Note: You can use a solid belt, but its size will depend on your table saw and the size of the larger pulley.

KIT. Currently, *Woodsmith Project Supplies* is offering a hardware kit for the low-speed grinder. This kit includes all the hardware you need except the large pulley and belt (which can be ordered separately) and the grinding wheels. When ordering the pulley, please specify the diameter you'd like (4", 5", or 6").

7111-100 Low-speed Grinder Kit $74.95
PS-111 4", 5", or 6"-Dia. Pulley $9.95
6804-500 Power-Twist Belt (4-feet long) $34.95

FLIP-TOP TOOL STAND

The flip-top tool stand on page 32 requires some commonly available hardware. But if you can't find the casters, *Woodsmith Project Supplies* is currently offering a set of four general-duty swivel casters with a load rating of 500 lbs.

796-250 3"-dia. Locking Casters (Set of 4) $39.95

ARBOR SPEED	PULLEY SIZE	WHEEL SPEED
3000 rpm	4"-dia.	1500 rpm
3500 rpm	4"-dia.	1750 rpm
4000 rpm	5"-dia.	1600 rpm
4500 rpm	6"-dia.	1500 rpm

WOODSMITH PROJECT SUPPLIES

If you would like to order project supplies or books from *Woodsmith Project Supplies*, please use our Toll Free order line, see below. It's open Monday through Friday, from 8 AM to 5 PM Central Time.

Before calling, please have your VISA, MasterCard, or Discover Card ready.

If you would like to mail your order in, call the number below for more information concerning shipping charges as well as any applicable sales tax.

1-800-444-7527

Note: Prices subject to change after August 1997

WoodNet™ NOW ON THE WEB!

- Over 70 Woodworking Tips Online
- Project Plans You Can Download
- WoodNet Forum — Woodworkers' Q & A
- Home Improvement Forum
- Power Tool Reviews
- Links to Other Woodworking Sites
- Online Back Issue Index

Point your browser to:

http://www.augusthome.com

Select "Woodworking" from the Welcome Page menu.

MAIL ORDER SOURCES

Similar project supplies and hardware may be ordered from the following companies:

Constantine's
800-223-8087
Polyurethane glue, Arbor assembly, Power-Twist belt, Grinding wheels & Sharpening supplies

Lee Valley
800-871-8158
Arbor assembly, Power-Twist belt, Grinding wheels & Sharpening supplies

Woodcraft
800-225-1153
Polyurethane glue, Arbor assembly, Power-Twist belt, Grinding wheels & Sharpening supplies

Woodsmith Store
800-835-5084
Polyurethane glue, Grinder hardware, Power-Twist belt, Grinding wheels & Sharpening supplies

Woodworkers' Store
800-279-4441
Polyurethane glue, Grinding wheels & Sharpening supplies

Woodworker's Supply
800-645-9292
Polyurethane glue, Arbor assembly, Power-Twist belt, Grinding wheels & Sharpening supplies

FINAL DETAILS

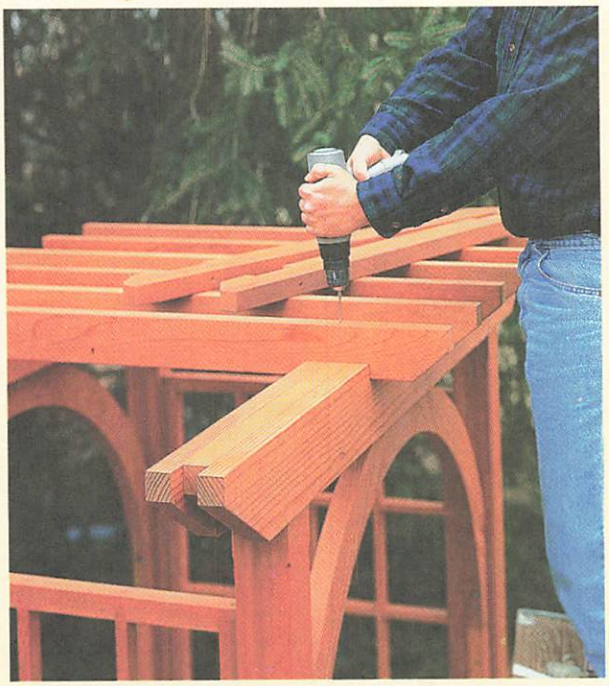

◄ **Garden Arbor.** *Building a large outdoor project doesn't have to be complicated. In fact, we designed this project so it can be built in sections with very basic joinery. Then it can be taken outside and screwed together. Plans start on page 6.*

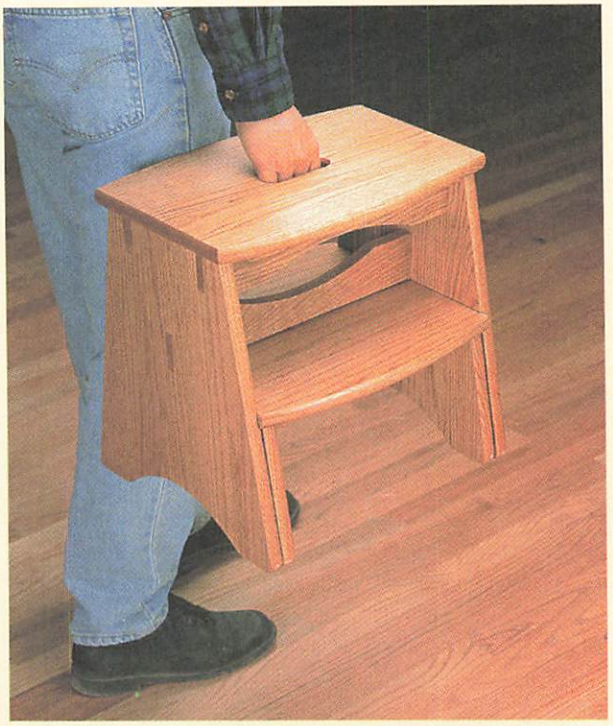

▲ **Step Stool.** *Our portable step stool makes it easy to get to those hard to reach places around the house. Plus, it features a convenient pull-out step, see page 14.*

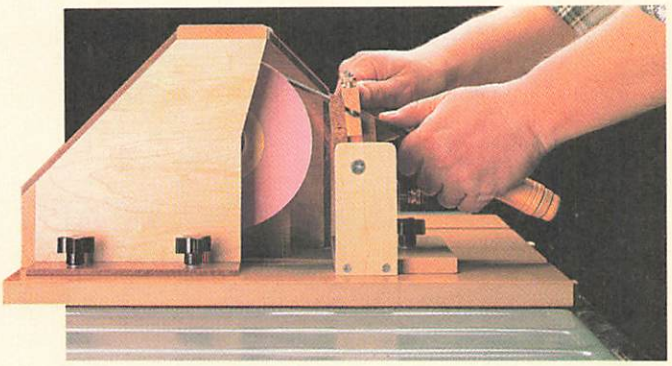

▲ **Low-speed Grinder.** *This shop-built grinder allows you to turn your table saw into a first-class sharpening station. Complete plans begin on page 20.*

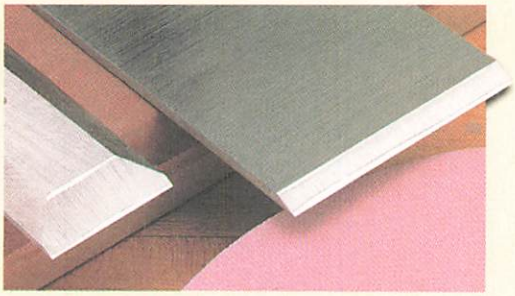

▲ **Hollow Grinding.** *The quickest way to producing a razor-sharp edge is to start with a good hollow ground bevel. Step-by-step instructions begin on page 28.*